Best Management Practices for Dewatering and Stabilization of Dredged Materials in Ohio

Final Report

For Lake Erie Protection Fund Grant No. 536-2018

Submitted by
Zhe Luo, Ph.D., P.E.
Assistant Professor
Department of Civil Engineering
The University of Akron
Akron, Ohio 44325-3905
Phone: 330.972.7292
Email: zluo@uakron.edu

Submitted to
Ohio Lake Erie Commission
347 N Dunbridge Road
Bowling Green, Ohio 43402

August 2019

ACKNOWLEDGEMENTS

The University of Akron would like to acknowledge the financial support provided by the Ohio Lake Erie Commission – Lake Erie Protection Fund through Grant No. 536-2018. The research team would like to thank Sandra Kosek-Sills and Lynn Garrity at the Ohio Lake Erie Commission, who coordinated this project. A special thanks goes out to Debi Beck and Scudder Mackey from the Ohio Department of Natural Resource (ODNR) Office of Coastal Management, who advised the research team as agency advisers throughout the course of the project.

The research team would also like to thank the following individuals: Brandon Buschmeier and Will Haasz at Menard Group USA, who provided their valuable expert opinions on the practical aspects of ground improvement; Sheila Pearson at The University of Akron, who reviewed the draft of this report; and Monica Moody, Erika Howard and Tim Channels at The University of Akron, the undergraduate research assistants who helped to conduct the literature search. Thanks to the funding from Ohio Lake Erie Commission, this research supported two Honor Projects of The University of Akron Williams Honors College: "Investigation of Dredge Material Dewatering Through Hydraulic and Ground Improvement Methods" by Monica Moody, and "Stabilization of Dredged Materials in Ohio – An Investigation of Mechanical, Chemical and Biological Dewatering Techniques" by Erika Howard.

The contents and opinions of this report reflect the views of the authors, who are solely responsible for the facts and the accuracy of the research results presented herein. The contents of this paper do not necessarily reflect the official views or the policies of any agencies.

ABSTRACT

This project was initiated in the context of Senate Bill 1 (S.B. 1), which will prohibit open water placement of dredged materials in Lake Erie in the State of Ohio after 2020. In Ohio, nearly 1.5 million tons of material are dredged annually from harbors on the north shore in order to keep the shipping channels open. S.B. 1 calls for immediate exploration of potentially beneficial uses for the dredged materials. As indicated by Ohio Environment Protection Agency, there are a variety of ways to use dredged materials, including beach/near shore nourishment, habitat creation or restoration, landscaping, topsoil for agriculture, road construction, landfill cover, brownfield restoration, land reclamation, concrete and concrete-based goods, as well as bricks, blocks and other construction materials made using dredged materials. For these beneficial uses, rapid dewatering of dredged materials is generally the very first and unavoidable step cycle of preparing the dredged material for beneficial use.

This project was funded by Ohio Lake Erie Commission to investigate best management practices for dewatering and stabilization of dredged materials in Ohio, focusing on two objectives: 1) how to rapidly dewater and consolidate the dredged materials for cost-effective placement and storage and 2) how to improve the resistance to erosion in projects where dredged materials are used for wetland restoration and erosion control. The research team performed a comprehensive literature review on several commonly-used dewatering techniques for dredged materials, including hydraulic placement, ground improvement approaches, mechanical dewatering, chemical treatment, and biological methods. In each of these categories, two or more detailed dewatering techniques are considered, including a general description, required materials and equipment, general procedure, a case study (if one exists), benefit and cost, and advantages and disadvantages. A final recommendation regarding the use of each dewatering technique was provided for use by agencies and stakeholders.

Based on a synthesis of the reviewed dewatering approaches, a decision tree for selecting an optimum dewatering technique is developed in this study. Key factors considered in this decision tree are 1) footprint or site space, 2) time and/or climate constraint, 3) type of dredged materials, and 4) availability of labor, equipment and chemical additives. This decision tree is divided into “three branches” that cover potentially effective dewatering techniques so that the decision can be logically made based on factors in the following sequence: footprint, time and

season constraints, and type of dredged materials. In practice, the best dewatering solution can be a combination of two or more methods, and thus this decision tree also implies a full cycle of dewatering activities. This decision tree does not advocate a universal dewatering technique for all sites, because the best solution can be site-specific. For example, the content of dredged materials from the Port of Toledo is different from those from the Port of Cleveland. This decision tree can serve as a toolbox for local agencies and stakeholders in their decision making and/or development of field demonstration projects.

Shoreline restoration and erosion control is one promising area for the beneficial use of dredged materials. As a by-product of this project, the research team also identified several approaches that are associated with dewatering projects, including the direct placement of dredged materials on eroded shorelines, chemical treatment and compaction for shoreline restoration, and use of geotextile tubes filled with dredged materials for shoreline erosion control.

Table of Contents

ACKNOWLEDGEMENTS I
ABSTRACT II
Table of Contents IV
1. INTRODUCTION 5
1.1 Background 5
1.3 Organization of the Report 7
2. LITERATURE REVIEW 8
2.1 Sediment Basin 8
2.2 Lagoons/drying fields 13
2.3 Progressive Trenching 16
2.4 Vacuum Well Points 20
2.5 Underdrainage Dewatering 22
2.6 Geotextile Tube Dewatering 24
2.7 Sludge Thickening 27
2.8 Mechanical Dewatering 30
2.9 Chemical Treatment 45
2.10 Vegetative Dewatering 50
3. SYNTHESIS OF DEWATERING OF DREDGED MATERIALS 53
3.1 Decision Tree for selecting dewatering techniques 53
3.2 Beneficial use of dredged materials for shoreline erosion control 56
4. SUMMARY AND CONCLUSIONS 59

1. INTRODUCTION

1.1 Background

This research project aims to study the best practices for rapid dewatering of materials dredged from Lake Erie and stabilizing them for beneficial use, such as in wetland restoration or erosion control projects in Ohio. Nearly 1.5 million tons of materials are dredged at harbors on Ohio's shore each year. With the passage of Senate Bill 1, local governments and private businesses are investing a greater effort to use these materials for beach nourishment, habitat creation or restoration, landscaping, road construction, landfill cover, brownfield reclamation, and other land reclamation purposes. In these beneficial uses, the dredged materials are first processed by dewatering the sediments (which contain a mixture of sand, silt, organic matter and contaminants) and blending them with a reagent admixture for stabilization and solidification to create an engineered structural fill or agricultural soil. Two of the practical needs for management of dredged materials are 1) how to rapidly dewater and consolidate the dredged materials for cost-effective placement and storage and 2) how to improve the resistance to erosion in projects where dredged materials are used for wetland restoration and erosion control.

To address these needs, the research team reviewed and synthesized the current dewatering practices to identify and recommend several dewatering approaches for managing the materials dredged from Lake Erie. The candidate dewatering techniques based on the literature can be categorized into: 1) hydraulic placement, 2) ground improvement approaches, 3) mechanical dewatering, 4) chemical treatment, and 5) biological methods. Each category consists of two or more detailed techniques, as summarized in Table 1. As can be noticed from this table, some dewatering techniques was already shown to be either infeasible or ineffective in a previous research study; thus, these techniques are excluded in this project. Table 1 indicates the scope of this study; however, it should be noted that other emerging dewatering technique exist such as froth flotation, magnetic separation, grain size separation, gravity separation, among others (Estes and McGrath 2014). Nevertheless, in this project, the research team focused on the established techniques listed in Table 1. The best dewatering solution, which can be a combination of two or more methods listed in Table 1, will depend on costs, available footprint area, labor, equipment, as well as time and seasonal constraints.

Based on the literature review and a synthesis of the various dominating factors, a decision tree for selecting an optimum dewatering technique is developed in this project. The factors considered in the decision tree development include footprint or site space; time and/or climate constraint; type of dredged materials; availability of labor, equipment and chemical additives; and cost. The decision tree will provide a tool to assist local agencies and stakeholders in their decision making and/or in the development of field demonstration projects. As a byproduct from this project, the research team also identified several dewatering techniques that can be readily adapted for shoreline erosion control, as a potential beneficial use for dredged materials in Ohio.

Table 1: Dewatering techniques identified in the initial literature review.

	Categories of dewatering techniques				
	Hydraulic placement	**Ground improvement**	**Mechanical dewatering**	**Chemical treatment**	**Biological dewatering**
Detailed dewatering techniques	• Hydraulic basin • Lagoon	• Progressive trenching • Vacuum well points • Underdrainage • Capillary wicks[(a)] • Periodic mixing of crust[(a)] • Electroosmosis[(a)] • Pressure-injected sand slurry[(b)]	• Geotextile tube (Geotube) • Sludge thicken • Belt filter press • Chamber filter press • Plate and frame press • Plate and frame press • Screw press • Centrifuge	• Natural organic compounds (such as chitin) • Inorganic products (such as lime, ferric chloride and aluminum sulfate) • Synthetic organic compounds known as polymers (such as coagulants and flocculants)	• Vegetative dewatering • Landfarming[(c)]

Notes:

(a) These solutions are excluded from this research, as a field demonstration project by Haliburton et al. (1978). indicated that they were infeasible or ineffective for dewatering dredged materials.

(b) This solution is excluded from this research, since Haliburton et al. (1978) strongly recommended that "more detailed investigations be undertaken to determine the exact behavior of sand-injected slurry and to refine slurry injection techniques and formulate methods for prediction of potential effects when and if the technique is used on a large-scale basis."

(c) This approach is not applicable to sediments that contain large amounts of heavy metals, and the mechanism is similar to vegetative dewatering; thus, the landfarming approach has been excluded from this study.

1.3 Organization of the Report

This research report is organized as follows: Chapter I (the current chapter) provides an overview of the research project; Chapter II summarizes a comprehensive literature review of the existing dewatering techniques for dredged materials that were listed in Table 1; Chapter III documents the developed decision tree and discusses several beneficial uses of dredged materials for shoreline erosion control; and Chapter IV provides a summary and the conclusions of this research project.

2. LITERATURE REVIEW

2.1 Sediment Basin

General description

Sediment basins, settling basins or settling tanks can be used for the dewatering of dredged materials. A sediment basin is a temporary settling pond that can release runoff at a controlled rate, as it is designed to detain the slurry long enough to allow most of the sediments in the dredged materials to settle. Figure 1 shows a photograph of a sediment basin installed in the field.

Once dredged slurry has been discharged into a basin or tank, the velocity of the slurry significantly decreases, and it loses the energy needed to carry solid particles. The effect of gravity then causes solid particles in the slurry to fall to the bottom of the basin or tank, and clear water is discharged as it flows over/through a weir or spillway (from a basin) or through a pipe or outlet (from a tank). If time is not a constraint, evaporative drying from the basin can allow the dredged materials to dry.

Fig. 1: A sediment basin in the field (Source: ODNR 2006).

Flocculating agents can be used in conjunction with settling basins to accelerate the removal of larger particles from the slurry, allowing them to settle at a faster rate. However, an excessive dose of such chemicals can cause the water to become overly acidic and/or toxic.

As the process continues, the settled particles will form a sludge at the bottom of the basin. Once settling is complete, the settlement area can be either leveled and seeded or be loaded out and beneficially deposited at other sites as topsoil, fill for low areas, etc. To prepare it for use as topsoil, the sludge is removed from the basin by using a scraper or sludge rake and is collected in a hopper. The sludge is generally further dewatered using methods such as mechanical dewatering at another facility before being trucked to its final destination (Reynolds and Richards 1996).

Sediment basins are most effective for processing slurry that contains sands and coarse particles rather than for fine particles such as silts and clays, as the settling velocity is based on particle density, particle diameter, and the drag coefficient. Ohio EPA indicates that the minimum dewatering time for sediment basins is 48 hours and the maximum time is seven days (Moody 2019).

Materials and equipment

There are two main components in the design of a sediment basin: the dewatering zone and the storage zone (Figure 2). The dewatering zone is the location where particles physically settle out of the slurry, and the storage zone is where sediment falls after it has separated from the water. The total volume of these two areas must be below the principle spillway elevation. When used in construction applications, the design volume is dependent on the drainage area from which the basin is accepting runoff. The shape of the basin is also a critical factor, as the appropriate ratio of the flow length to the effective basin width will allow for the optimum settling time of particles.

Sediment basins are typically composed of a dam or embankment, a pool area for water and sediment storage, principal and emergency spillways, and a controlled dewatering device or skimmer. The entire structure may be removed when construction is complete and the drainage area is stabilized, or the sediment basin may be converted to a detention basin to facilitate post-construction stormwater management.

The water from a sediment basin is removed from the top of the dewatering zone. This can be accomplished using perforated risers, skimmers, and/or siphons, as shown in Figure 2.

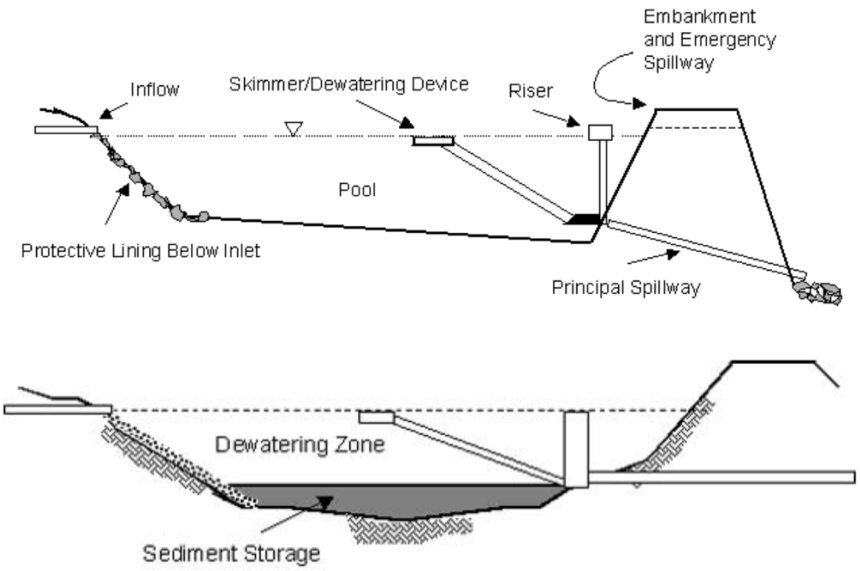

Fig. 2: Typical components of a settling basin (Source: ODNR 2006).

General procedure

Sediment basins can be constructed following guidelines from Ohio Environmental Protection Agency (EPA). These guidelines provide the design criteria for pools, embankments and dewatering devices, and they also specify the limitations of sediment basin dewatering, such as:

1) Site selection: failure of the basin structure should not result in loss of life, damage to homes or buildings, or interruption of use or service from private utilities.
2) Design: several factors that should be considered, such as:
    a) Drainage area (should be 100 acres or less).
    b) Height of the dam (should be 25 feet or less).
    c) Life of the sediment basins (the basin should be removed within 36 months of its construction).
3) Sediment basin excavation.
4) Channel compaction.
5) Hydro-seeding.
6) Flexamat installation.
7) Establishment of vegetation.

The detailed procedure for constructing a sediment basin can be found in McLaughlin (2015).

The time required for sediments to settle out of a slurry is referred to as the *detention time*. The longer the detention time, the higher the amount of solid particles that settle to the bottom of the basin. Research conducted by Highway Research Center at Auburn University (Perez 2015, 2016) shows that in sediment basin dewatering, most settlement occurs within the first 24 hours: the amount of sediment resulting from a 24-hour detention is 2.7 times the amount of sediment in a 6-hour detention, while the sediment in a 7-day detention is 30% more than the sediment in a 24-hour detention (Perez et al. 2015).

Baffles, which can increase the flow length of the sediment basin, can be integrated into a basin design. In addition to increasing the flow length, baffles can also decrease the turbulence of the flow into the basin, thereby reducing interference in the settling process. Baffles can be either solid or porous. As water moves through the basin, solid baffles force the water to move back and forth and can thus can increase the detention time. In contrast, porous baffles spread the flow over the entire width of the basin, and the flow of slurry is slowed as it flows through the baffles. For this reason, porous baffles are more efficient for increasing the rate of sedimentation (McLaughlin 2015).

Case study

An Auburn University study provides the design and construction of a 2,789-ft^3, large-scale sediment basin at the university's Erosion and Sediment Control Facility (AU-ESCTF) (McLaughlin 2015). This study focused on basin design and construction, the effectiveness of the drainage system, and the effectiveness of flocculating additives for promoting the settlement of small solid particles. Detailed plans of the sediment basin and a forebay (consisting of an excavated sump positioned between two standard rip-rap ditch checks with a filter fabric choker, located approximately 20 m upstream of the sediment basin) that were constructed as part of this study are shown in Figure 3.

The case study indicated that the major function of a sediment basin is to perform water quality polishing rather than sediment capture. Regarding the effectiveness of sediment capture, the forebay was the most effective area, capturing 61.5% by weight of the introduced sediment. The remaining portion of the introduced sediment was captured within the basin.

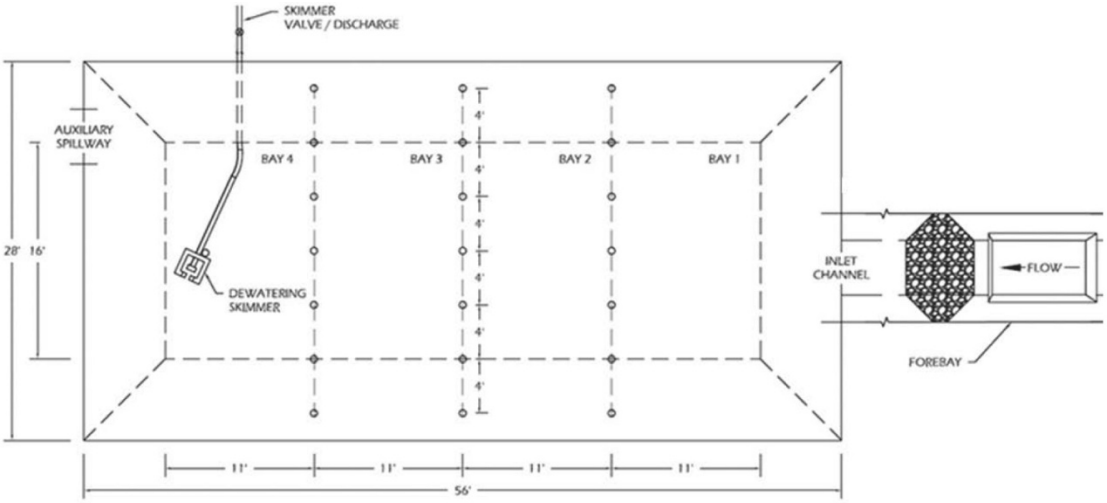

(a) sediment basin plan detail

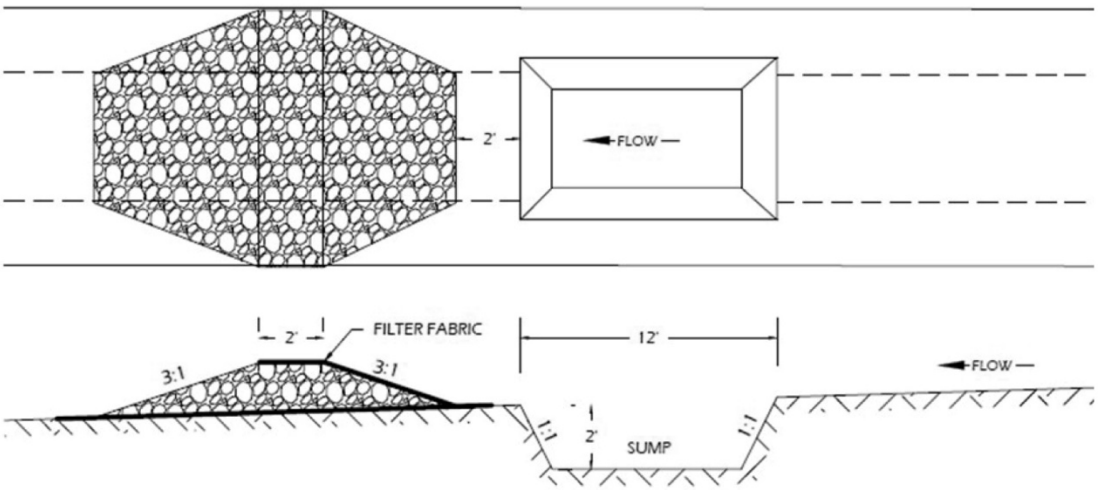

(b) forebay plan and profile details

Fig. 3: Typical components of the settling basin and forebay constructed at Auburn University ESCTF (Source: Perez 2016).

<u>Benefit and cost</u>

The use of sediment basins to dewater the dredged materials is considered to be less expensive than other existing approaches. However, for beneficial use purposes, the dredged materials that are dewatered by sediment basins can still have high moisture content and may require further dewatering using other approaches, such as mechanical dewatering using belt filter press.

Advantages and disadvantages of sediment basins

Advantages of sediment basins include but are not limited to:

1) Sediment basins are effective for settlement of sands and coarse particles from slurries.
2) Dewatering using sediment basins is less expensive as compared to other techniques.

Disadvantages of sediment basins include but are not limited to:

1) Sediment basins are less effective in treating slurries containing silts and clays.
2) Sediment basins require up to seven days of detention time. Thus, they may not be suitable for the immediate dewatering of massive amounts of dredged materials. In addition, sediment basins may not work well during the winter months or during rainy seasons.
3) Dredged materials treated by sediment basins may still have high moisture content and, thus, other dewatering techniques such as mechanical dewatering may be required to further dewater the dredged materials prior to subsequent use.

Recommendation

Since sediment basins are more suitable for dredged materials that contain sands and coarse particles, this technique can be a candidate for dewatering of dredged materials from areas near the Port of Cleveland, but only for the initial dewatering operation.

2.2 Lagoons/drying fields

General description

Lagoons, also known as *drying fields*, are a traditional approach for dewatering dredged materials, which are highly moist and contain only 15–20% of dry solids. In this approach, water is removed from dredged slurry through evaporative drying, with the assistance of drainage pipes. Figure 4 shows an example of lagoon fields located in Bremen, Germany.

Evaporation is the major dewatering mechanism in lagoons (Reynolds and Richards 1996). However, lagoons or drying fields also contain a system of pipes, and any water that drains into the pipes is removed from the lagoon or drying field and transported to a water treatment plant (Foged et al. 2007).

Fig. 4: Lagoon fields in Bremen, Germany (Source: Foged et al. 2007)

Materials and equipment

The materials and equipment involved in lagoons or drying fields include but are not limited to: earthwork machines, drainage pipes, and sand drainage layers.

General procedure

The following brief description of the dewatering process for lagoons or drying fields is summarized based on Foged et al. (2007).

Dredged slurry is placed in a lagoon or drying field, and the slurry undergoes evaporative drying with the assistance of drainage pipes. This dewatering process can take up to one year in an area with a moderate climate. After drying is completed, the dry solids content is typically increased to 30~40%, and the sand and other course particles can be excavated from the lagoon. Most of the sand and coarse particles will be located near the outlet of the discharge pipe due to differential settlement between coarse and fine particles.

The re-use of lagoon fields involves replacing the top drainage layer, as fine particles will have infiltrated into the upper layers during the dewatering process. The dewatered materials removed from the lagoon are not suitable for compaction. Therefore, once they are removed from the lagoon, the materials are mixed with sand to ensure stability and are sent to a confined disposal facility (CDF) for proper disposal.

When lagoons are combined with a sediment basin, the dredged materials are first pumped into the sediment basin or pond. If dredged materials are left in the basin/pond for a period of time to allow the solid particles to settle before entering the lagoon, the results of lagoon dewatering are improved. If the dredged materials have first been treated in a sediment basin, they will have already been thickened to approximately 25% dry materials by the time they enter the lagoon.

Benefits and costs

Lagoons or drying fields are considered to be less expensive than other existing dewatering approaches. However, these techniques take a longer time than other approaches, taking up to a year to complete one drying cycle. The lagoons or drying fields also consume land and space. Similar to sediment basin dewatering, the dredged materials dewatered in a lagoon can still have a high moisture content and may require further dewatering through the use of other approaches.

Advantages and disadvantages of lagoon dewatering

Advantages include but are not limited to:

1) Dewatering using lagoons is less expensive as compared to other techniques.
2) Lagoons can be paired with a sediment basin to enhance dewatering efficiency.

Disadvantages include but are not limited to:

1) Lagoons are less effective in producing dry solids. The percentage of the dry materials can be increased to 30~40% after drying, compared to 15~20% before drying. Thus, it is necessary to mix sands with the dewatered materials before depositing them in a CDF. To enable beneficial use of the materials, an additional dewatering technique (such as mechanical dewatering) is needed to further dewater the materials.
2) Lagoon drying requires up to one year to complete. Thus, lagoons may not be suitable for immediate dewatering of a massive amount of dredged materials. In addition, lagoons may not work well in winter months or during rainy seasons.

Recommendation

Lagoons can be used to dewater the dredged materials if space and time are not an issue, or when the dewatered materials will be mixed with sand and sent to a CDF.

2.3 Progressive Trenching

General description

Surface trenches, which are often used to remove surface water from construction and agricultural sites, can also be utilized to draw the water level down to an appropriate level at a site that has been filled with dredged materials.

The mechanism of dewatering using trenching is to promote the runoff of water through crust desiccation cracks in the dredged materials and into drainage trenches, which carry the water off-site through the outlet weirs. Good surface drainage provided by the trenches further expedites evaporation, allowing the dredged materials to dry from the surface downward.

Since dewatering by progressive trenching relies on gravity-assisted seepage, the location and spacing of the trenches should be based on features in the site topography, such as gentle sloping surface.

Materials and equipment

This approach requires trenching equipment such as a Riverine Utility Craft (RUC; shown in Figure 5), an amphibious vehicle (shown in Figure 6), or an amphibious excavator (shown in Figure 7).

Fig. 5: Riverine utility craft (Source: https://www.oobject.com/1969-chrysler-riverine-utility-craft/)

Fig. 6: Amphibious truck (Source: Cheromcha 2017)

Fig. 7: Amphibious excavators (Source: Hillebrand 2013)

General procedure

The aim of progressive trenching is to provide adequate surface drainage of dredged materials within the disposal area. The operation can vary, depending on the equipment selected for installing the trenches (RUC, amphibious vehicle, or amphibious excavator). First, the dredged material is placed at an optimal thickness.

Once surface water has drained through weirs and a thin crust has developed on the surface of the dredged materials, initial trenching can then be performed. The spacing of the trenches and the path used for the trenching equipment are two important factors to consider when conducting

progressive trenching. To ensure continuous surface drainage and evaporative drying, as cracks in the crust deepen, it is essential to periodically deepen the drainage trenches as the water level falls.

It is noted that if any lift is too thick, it will require repeated trenching operations, which will not be cost-effective. In addition, it is also essential to allow some time to allow drying and desiccation in the trench bottom to occur between each successive trenching operation. I should also be noted that trenching using an RUC may not be effective if the crust is too thick. Moreover, intersecting trenches can create minor problems because trenches installed earlier can become sealed when a trenching operation is conducted perpendicular to an existing trench. In such a case, hand grading procedures are required to un-seal the trench installed earlier.

Case study

Among the case studies of progressive trenching that have been reported in the literature, two are selected for reference.

The first case, described in Moody (2019), is from a site in the Netherlands where dredged materials were initially placed in a three- to four-foot lift. Approximately two months later, an amphibious vehicle was used to create trenches that were two to four inches deep, with eight feet of spacing between the trenches. Four months later, the trenches were deepened to one foot in depth.

The second case study, performed by the Environmental Effects Laboratory (EEL) of the U.S. Army Engineer Waterways Experiment Station, included a field demonstration of progressive trenching at Upper Polecat Bay Disposal Area in Mobile, Alabama (Haliburton 1978). This project adopted RUC for creating the trenches and re-trenching. The conclusions reveal that although gravity seepage has little contribution to the dredged material water loss, the enhancement of evaporation through improved surface drainage is the primary factor driving the dewatering process. This demonstration project was considered to be successful.

Benefit and cost

A benefit-cost analysis of progressive trenching was conducted at the end of the demonstration project by the Environmental Laboratory of U.S. Army Engineer Waterways Experiment Station (Haliburton 1978). In 1972 dollars, the total cost involved in field trenching was approximately

$58,470, while the net worth by saving disposal storage volume was $145,200. As such, in this demonstration project, the cost-to-benefit ratio was estimated to be 2.48. Because this was a test program, the future cost of trenching should be one-third less than the total cost of $58,470 indicated in this report. A future trenching project was expected to have a cost-to-benefit ratio of 3.72. In 1972 dollars, the trenching cost is $0.71/m^3 of additional storage volume created.

Advantages and disadvantages of progressive trenching

Advantages include but are not limited to:

1) Trenching is good for large-scale dewatering project and can accommodate a large volume of dredged materials.
2) Trenching is suitable for fine-grained dredged materials.
3) Trenching is cost-effective, as indicated by the high benefit-cost ratio of 3.71.

Disadvantages include but are not limited to:

1) Trenching operations require a large treatment area, which should be close to the dredging channel or port.
2) Progressive trenching operations, surface runoff, and gravity seepage requires a long period of time. Progressive trenching requires time periods that are sufficient to allow drying and desiccation in the trench bottoms in between successive trenching operations.
3) Progressive trenching is not suitable to conduct during the winter month and during times with high precipitation.

Recommendation

Progressive trenching combined with evaporative drying are recommended as one candidate solution for dewatering projects that use dredged materials from Lake Erie.

2.4 Vacuum Well Points

General description

The well point system for dewatering, a technique that is commonly used for dewatering at construction site, is composed of closely spaced (3~10 feet) wells that are inserted into the ground in a line or ring around the targeted dewatering area, as shown in Figure 8. The wells in the system are connected to riser pipes, which bring water to the surface (e.g., Han 2015). The riser pipes are connected to header pipes, which are connected to a dewatering pump, which will generally have a vacuum to pump the water up from the wells. The well point or well tip is a small screen constructed of brass/steel mesh, plastic pipe, or polyvinyl chloride (PVC) pipe.

The well point system is most suitable for dewatering soils that can be drained by gravity flow, such as gravels or sands (coarse materials). Dewatering of fine-grained materials with this system requires a vacuum to be used. In most cases, the site to be dewatered needs a cover or blanket of sands to improve the surface permeability. An impermeable membrane, which can enhance the vacuum effect, is placed on top of the sand layer.

Conventional PVC well points are able to draw down a groundwater table up to 15 feet when installed in a multistage system. To reach an optimum dewatering effect, vacuum well point dewatering may require more than one year to complete.

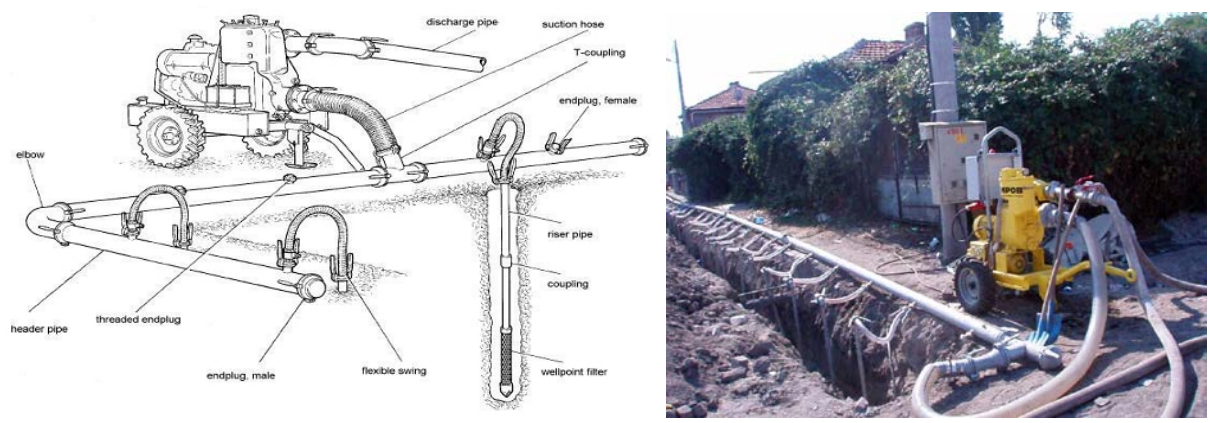

Fig. 8: A vacuum well point system: Schematic of the system (*left*) and a photo of a system in operation (*right*). (Sources: Gulf Boring Engineering Est. 2019; Harmony Suites 2019).

Materials and equipment

The well point system requires excavation equipment, sand, well point filters (typically made from steel or brass), riser pipes, PVC piles, suction hoses, pile connections, membranes, and vacuum pumps.

General procedure

Vacuum well points are constructed according to the following steps (after Haliburton 1978:

1) Excavate the crust of the dredged materials to about 0.3 m deep using a shovel.
2) Install a metal casing, then flush out any dredged materials in the metal casing.
3) Install a riser pipe inside the metal casing.
4) Place sand between the riser pipe and metal casing.
5) Use bentonite clays as a seal at the top of the sand.
6) Backfill the dredged materials to the ground surface.
7) Remove the metal casing.

Case study

Haliburton (1978) reported a field demonstration project where dredged materials were dewatered using a vacuum well point system. This research project demonstrated that vacuum well point dewatering is technically feasible and effective.

Benefit and cost

A cost–benefit analysis of progressive trenching was conducted at the end of the demonstration project by Environmental Laboratory of US Army Engineer Waterways Experiment Station (Haliburton 1978). In 1977 dollars, the unit cost ranged from \$3.70/m^3 to about \$7.20/m^3 for vacuum well points spaced 6 m apart. Using an inflation rate of 4%, the unit cost in 2019 is approximately \$19.21/m^3 to \$37.39/m^3.

Advantages and disadvantages

Advantages of using vacuum well points include but are not limited to:

1) Vacuum well points are good for large-scale dewatering projects and can handle a large volume of dredged materials.

2) Vacuum well points are effective for dewatering fine-grained dredged materials. They also are used for the dewatering of coarse-grained materials.

Disadvantages include but are not limited to:

1) The equipment for vacuum well points and the associated operation costs are higher than those for trenching, as it requires more materials, labor and power.
2) The mechanical failure of the vacuum pump is a possibility.
3) Adequate space and time are required for effective dewatering using vacuum well points. When using this process, the dewatering process may take more than 12 months.

Recommendation

Haliburton (1978) recommended that vacuum well point dewatering of fine-grained dredged materials should be used only if progressive trenching is not feasible. The vacuum well point is not cost-effective, when compared to other dewatering alternatives.

2.5 Underdrainage Dewatering

General description

Underdrainage, sometimes combined with vacuum, can be used as an alternative of dredged material dewatering. This approach relies on the fact that fine-grained materials are highly compressible, and their consolidation can be significant if changes in effective stress (even if the change in effective stress is slight) can be realized through the application of seepage forces and/or vacuum-induced negative pore pressure. Figure 9 illustrates the concept of a vacuum-assisted underdrainage system.

Materials and equipment

The drainage materials needed for underdrainage include filter cloth, well-graded concrete sand, and Schedule 40 PVC pipes (which can be used as collector piles).

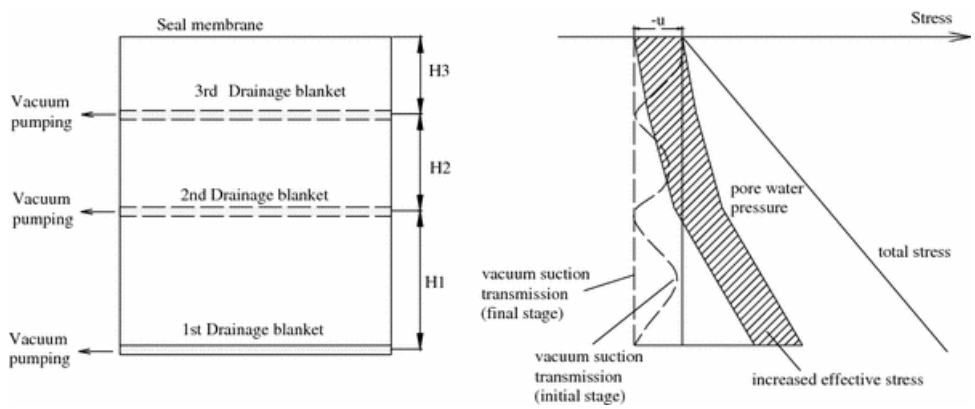

Fig. 9: Schematic of vacuum-assisted underdrainage (Source: Li et al. 2019).

General procedure

The procedure for creating an underdrainage system has four steps: 1) install an impervious liner, 2) install collector pipes, 3) place sand-drainage materials and 4) install vacuum pumps.

Case study

A study conducted in eastern China by Li et al. (2019), demonstrated one application of vacuum-assisted underdrainage systems for dewatering dredged materials. Before the dredged materials are placed in the containment area, a layer of drainage blanket (for example, a geosynthetic fabric) is placed above the pipework that will be used in conjunction with vacuum pumps (Li et al., 2019). The dredged materials are then placed to a predetermined height, H_1, as shown in Figure 1.

With the assistance of gravity flow, vacuum pumping is used to removes water and air from the dredged materials, resulting in consolidation. Once the water has been lowered to an appropriate level, the process is repeated with a second pumping system and drainage blanket. This method reduces the pore water pressure of the soil and, in turn, increases the effective stress, which produces consolidation. Geosynthetic fabrics were used as a drainage blanket in this study to increase the long-term soil stability and assist in the vacuum consolidation, but tests were also conducted using a sand drainage blanket instead of a geosynthetic fabric as the drainage blanket.

Benefit and cost

A cost-to-benefit analysis of vacuum-assisted underdrainage was conducted by the Environmental Laboratory of U.S. Army Engineer Waterways Experiment Station (Haliburton 1978). In 1972

dollars, the unit cost is $2.85/m^3 of additional storage volume created. This cost can be much lower if there are existing drainage supplied and equipment at the project site.

Advantages and disadvantages

Advantages of using vacuum-assisted underdrainage include but are not limited to:

1) A decrease in time required when geosynthetic materials are used.
2) Both geosynthetic fabrics and sand drainage blankets can be used to decrease water content by approximately 30%.
3) The unit cost for underdrainage can be much lower if the project site already has drainage materials and pipes.

Disadvantages include but are not limited to:

1) Maintenance is required.
2) It is not known if this approach is effective for dewatering multiple lifts of dredged materials.

Recommendation

Haliburton (1978) recommended that vacuum-assisted underdrainage dewatering be used only if it is not feasible to use the progressive trenching dewatering technique.

2.6 Geotextile Tube Dewatering

General description

Geotextile tubes (such as Geotube® units from P.T. Geotechnical Systemindo) are commonly used throughout the United States for the purpose of dewatering dredged materials. These tubes are typically made of woven polyester multifilament yarns or woven polypropylene (Englis and Hunter 2007), which are sewn together to provide high tensile strength, and the weave spaces allow solids to be trapped in the container as water passes through. After pumping dredged materials into the tubes, the tubes are then placed in containment areas to drain. For dredged materials containing solid particles less than 75 microns in size, chemical additives are added into dredged materials to facilitate agglomeration (Englis and Hunter 2007). Agglomeration of the fine particulates prevents them from migrating to the inner wall of the woven fabric, where they might interfere with liquids draining from the tube.

Over time, clean water filters out through several ports in the membrane of the geotextile tube, and dry materials are hauled away for use as topsoil, fill, or landfill cover (Dredge America 2019). The tubes can be stacked in multiple levels to conserve space (Fig. 10). In addition to stacking to conserve space, the tubes can be used in the creation of beneficial structures, including breakwaters, shoreline protection, and island creation (Dredge America 2019).

Fig. 10: Geotube and stacked Geotubes (Image sources: P.T. Geotechnical Systemindo 2016, *left*; Englis and Hunter 2007, *right*).

Materials and equipment

This dewatering technique mainly requires geotextile tubes made of woven polyester multi-filament yarns or woven polypropylene.

General procedure

After the containment area is selected and the geotextile tubes are placed, dredged materials are pumped into the tubes and chemical additives (if needed) are added. After allowing a sufficient time for the water to drain, any remaining dry solids are excavated and transported to other sites for confined disposal or beneficial use. The general procedure is illustrated in Figure 11.

Benefit and cost

Englis and Hunter (2007) reported that compared to other mechanical dewatering approaches (belt filter press, plate and frame press, screw press and centrifuge), the cost for geotextile tube dewatering is “low to medium.” Mastin and Lebster (2007) reported the unit cost is less than $4 per cubic yard (however, the costs for excavation, transportation and disposal were not included in the unit cost).

Fig. 11: Photographs of dewatering using a Geotube: 1) Site selection; 2) Excavation of surface vegetation and topsoil; 3) Installation of impermeable membrane and Geotube; 4) Pumping of sludge into Geotube; 5) Geotube after 3 to 4 cycles of refilling; 6) Removal of dry solids (Image source: TenCate Geosynthetics North America 2013).

Advantages and disadvantages of geotextile tube dewatering

Advantages of geotextile tube dewatering include but are not limited to:

1) Geotextile tube dewatering is one of the fast methods of mechanical dewatering.
2) Geotextile tubes are easy to operate.
3) Geotextile tubes have low costs in terms of maintenance and power use.
4) Geotextile tubes have low vapor and fume emissions.
5) Geotextile tubes achieve a high capture rate for sediments.

Disadvantages geotextile tube dewatering include but are not limited to:

1) Geotube dewatering requires a larger footprint than other dewatering methods.
2) Chemical conditioning is needed for fine-grained dredged materials.

Recommendation

Geotextile tube dewatering is recommended as one candidate solution in projects for the dewatering of materials dredged from Lake Erie.

2.7 Sludge Thickening

General description

Sludge thickening is one of the methods used for mechanical dewatering. Sludge thickening is usually performed as the second stage in a full dewatering process (e.g., after lagoon dewatering). The effectiveness of dewatering using sludge thickening depends on multiple factors such as the percentage of organic matter, the grain size distribution, and the concentration, temperature, and pH of the materials (Ringeling 1998). For example, a higher percentage of organic matter in the dredged materials leads to a higher percentage of fines in the grain size distribution and a higher concentration of mineral oils, which results in poor dewatering. The temperature can also affect the viscosity of the dredged materials, and the pH level of the dredged materials influences the effectiveness of any flocculating agents and chemical additives used in the process.

Materials and equipment

Equipment that is commonly used for sludge thickening includes but is not limited to a gravity thickener, a gravity belt thickener, and a rotary drum thickener. These types of equipment are described in the following subsections.

- ***Gravity thickener:*** Gravity thickeners are the most basic method of sludge thickening and function similar to clarifier tanks and settling basins, in that they allow suspended solids in the slurry to gradually sink and settle in the bottom of the tank (Figure 12). Given a sufficient amount of settling time, solids collected at the tank bottom will form sludge-like materials that need to be frequently removed for disposal using high-power, non-clogging slurry pimps. These sludges, which generally consist of 10–30% solids, will generally require further dewatering using machines (such as centrifuge decanters) before being transported to a disposal facility or a site for beneficial use. To expedite the formation of sludges, chemical conditioning (with polymers, ferric chloride, or lime) is usually used in conjunction with a gravity thickener, (Government of Ontario 2016).

Fig. 12: An example of gravity thickener (Source: Outotec 2016).

- ***Gravity belt thickener:*** A gravity belt thickener employs a slow-moving fabric belt to separate solids and free water. To precondition the sludge and promote the initial separation of solids and water, a polymer or another chemical additive is generally mixed into the dredged materials. Gravity belt thickeners have a smaller footprint than gravity thickeners, are fairly cost-effective, and consume less energy than other mechanical thickening devices. However, gravity belt thickeners are sensitive to the quality of the materials being thickened, and they require chemical preconditioning (Government of Ontario 2016). Figure 13 shows an example of gravity belt thickener.

Fig. 13: A typical gravity belt thickener (Source: BDP Industries 2019)

- ***Rotary drum thickener:*** Figure 14 shows an photograph of a typical rotary drum thickener. In this system, the dredged materials, which have already been preconditioned, enter the machine from a head box or flocculation tank and are then distributed into a rotating drum (Government of Ontario 2016). In the drum, the dredged materials are physically strained to separate the solids from the free water. The rotary drum thickener is equipped with a built-in spray backwashing system to flush out solids.

Fig. 14: Rotary drum thickeners (Source: Parkson Corporation 2019).

Compared to other thickening methods, the entire dewatering process using a rotary drum is enclosed so that odor and environmental issues are minimized. Similar to a gravity belt thickener, the rotary drum thickener unit has a relatively small footprint and is fairly cost-effective. Rotary drum thickeners consume less energy than other methods, such as the dissolved air flotation process or centrifugation. However, the materials entering the unit require the materials to be preconditioned with chemicals (Government of Ontario 2016).

General procedure

The dewatering of dredged materials using sludge thickening starts with transporting the dredged slurry to the dewatering facility, conditioning the dredged materials by mixing them with chemicals, dewatering using one of the thickener units described above, and transporting the resulting sludge to either a confined disposal facility or a project site for beneficial use.

Benefit and cost

The cost of sludge thickening consists of a one-time purchase or rental payment, plus costs for power and maintenance. The research team solicited an online quote (via Made-in-China) to obtain the purchase price of the equipment: the price of a gravity thickener can range from $20,000 to $60,000 per unit, while that of a gravity belt thickener or a rotary drum thickener can range from $10,000 to $30,000. It should be noted that if it is necessary to dewater a massive amount of dredged materials, multiple pieces of equipment are needed. As the operation also includes the costs for conditioning chemicals, power and maintenance, the total costs for using this method can be high.

Advantages and disadvantages of sludge thickening

Advantages include but are not limited to:

1) Except for a gravity thickener, most sludge thickeners require a relatively small footprint.
2) Sludge thickening is generally cost-effective.
3) Sludge thickening can be performed in all seasons of the year.

Disadvantages include but are not limited to:

1) Sludge thickeners require regular maintenance and power consumption.
2) Chemical conditioning is needed for fine-grained dredged materials.

Recommendation

Depending on the purpose of the beneficial use of dredged materials, sludge thickening can be used as a second step in a full dewatering process (e.g., following lagoon dewatering).

2.8 Mechanical Dewatering

Mechanical dewatering involves processes that use a mechanical device to dewater the dredged materials. These processes use of different types of equipment: a belt filter press, a chamber filter press, a plate and frame press, a screw press, or a centrifuge. Detailed descriptions for these devices in the dewatering of dredged materials and a discussion of the cost and benefit of mechanical dewatering can be found in the subsections below.

2.8.1 *Belt Filter Press*

General description

A belt filter press is a mechanical dewatering device that has been used for dewatering dredged materials. This device follows a multiple-step process to separate solids from water, employing three "dewatering zones" that serve different purposes. In general, these machines continuously press the soil–water mixture between two woven filter cloths (Englis and Hunter 2007). Figure 15 shows a schematic diagram of the entire belt filter press (including the three zones) along with a photograph of a belt filter press.

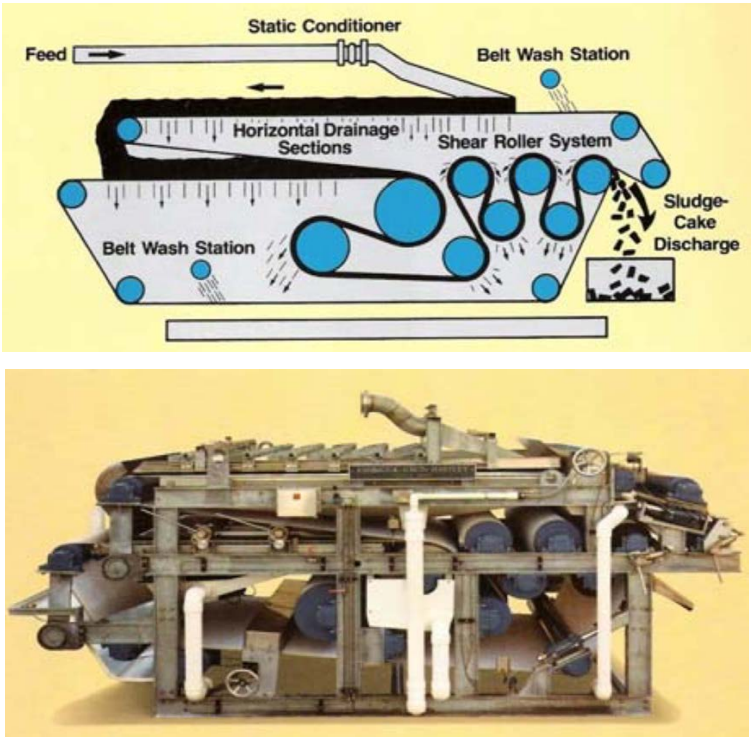

Fig. 15: Belt filter press: schematic diagram (*top*) and photograph of a belt filter press (*bottom*) (Source: Englis and Hunter 2007).

Materials and equipment

This dewatering approach requires one or multiple belt filter presses along with chemical agents for conditioning the dredged materials prior to dewatering.

General procedure

The following general procedure for employing a belt filter press is summarized based on a description of the process by Englis and Hunter (2007).

In reference to the schematic diagram in Figure 1, in the first dewatering zone in the belt filter press, the chemically conditioned dredged materials are evenly distributed onto the top belt of the system (the top gravity drainage belt in the section labeled "horizontal drainage sections"), and they pass through rakes (also called *chicanes*). This first zone is where the majority of the gravity drainage takes place, with approximately 50% of the water drained out of the materials through a gravitational process.

In the second dewatering zone, the dredged materials fall onto the lower filter belt cloth and are conveyed to a wedge-shaped area where the materials are compressed between two large rollers. This area, also known as the *low-pressure zone*, is where the initial formation of dense solids or *cakes* occurs.

In the third and final dewatering zone, also known as the *high-pressure zone*, the belt filter cloth passes through a shear roller system consisting of a series of small rollers rotate at various speeds. The rollers are designed in such a way that the belt passes through at a steep angle. The vertical orientation of the belt and the differential speed of the belt exert a shearing force on the solids and force additional water to be released.

After the dredged materials have passed through the entire length of the belt filter press, the sludge cakes are discharged and can be collected for reuse in a variety of beneficial applications.

Advantages and disadvantages of using a belt filter press

Advantages include but are not limited to:

1) A belt filter press is more versatile than other mechanical dewatering methods, as they can dewater most types of sludges (Government of Ontario 2016).

2) By using a belt filter press, a relatively high production rate of cake formation can be achieved.

3) The belt filter press is a reliable and adaptable piece of equipment and has a relatively small footprint.

4) Compared to other mechanical dewatering equipment, the belt filter press has a lower labor cost and is capable of operating continuously.

Disadvantages include but are not limited to:

1) A belt filter press has high vapor and fume emissions, and it has high energy consumption.

2) If the dredged materials have high concentrations of oil and grease, the oil and grease can permeate the filter cloth on the belt and reduce the ability of the belt filter press to drain water in an efficient manner (Englis and Hunter 2007).

3) Since the belt filter press equipment has numerous moving parts, it has high operation and maintenance costs associated with it (Foged et al. 2007).

4) Although the labor cost for physically operating the belt filter press is low, the variables that affect the output and operation of the press are controlled solely by the operator, meaning that the operator is required to perform constant visual surveillance of the machine, and rely on his/her own judgement to gauge if the machinery is not performing at optimum conditions.

Recommendation

The advantages for using a belt filter press make it an attractive option for the dewatering of materials dredged from Lake Erie. Based on the literature review, dewatering using a belt filter press is recommended as a candidate approach for dewatering dredged materials when time and space are constrained. In cases where time and space are not an issue, the belt filter press can also be used as a second-step for dewatering in a full dewatering process (e.g., following lagoon dewatering).

2.8.2 *Chamber Filter Press*

General description

The chamber filter press is similar to belt filter press in terms of the methodology used for dewatering. Using a chamber filter press, the dredged materials are squeezed into a chamber under high pressure; as the chamber is filled with dredged materials, the pressure applied to the dredged materials is increased. Figure 16 shows a schematic diagram and a photo of a chamber filter press, which consists of several chamber filter plates and a hydraulic cylinder. The recent advances in chamber filter press technology include automated washing cycles for the filter media and enhanced productivity, which make the chamber filter press more comparable to a belt filter press (Government of Ontario 2016).

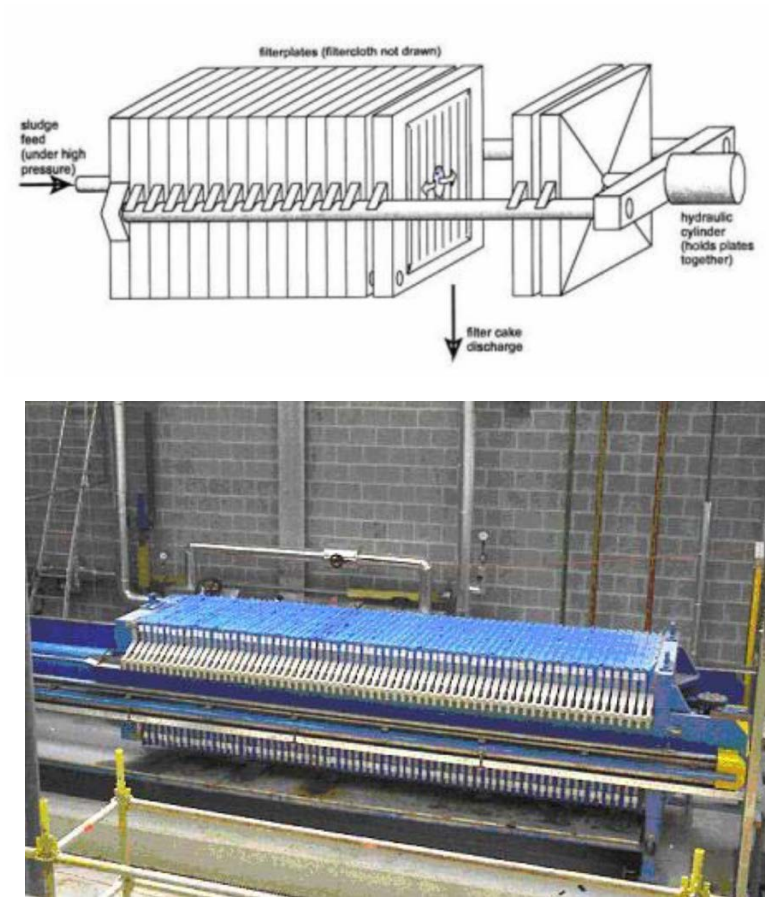

Fig. 16: Chamber filter press schematic (*top*) and chamber filter press (*bottom*) (Source: Howard 2019, Foged et al. 2007).

Materials and equipment

This dewatering approach requires one or multiple sets of chamber filter presses (Figure 1) as well as chemical agent for conditioning the dredged materials prior to adding the materials to the press.

General procedure

As shown in the schematic diagram in Figure 1, dredged materials are injected into the center of the press and each chamber of the press is filled. To ensure that the last chamber of the press is loaded before the mud in the first chamber begins to cake, an optimal filling time needs to be determined. As the chambers are filled with dredged materials, pressure inside the chamber will increase due to the formation of thick sludge or cakes. Meanwhile, liquids are drained through filter cloths by pressurized air force. For some materials, the drained liquid can be re-used to make the system more cost-effective.

Advantages and disadvantages of using chamber filter presses

Compared to a traditional belt filter press, advantages include but are not limited to:

1) The end product (cakes or sludge) of the chamber filter press has good mechanical properties, stockpiling of the dewatered materials is an option (Foged et al. 2007).
2) A chamber filter press is able to condense all types of sludge to very high concentrations of solids (Government of Ontario 2016).
3) Because the chamber filter press uses a static process for dewatering, the maintenance cost is significantly lower than that of a belt filter press.
4) The structure of a chamber filter press is designed to be less sensitive to abrasion, indicating a lower operating cost.

Disadvantages include but are not limited to:

1) Because this chamber filter press operates using a batch process, the dewatering of large quantities of dredged materials would require multiple pieces of machinery.
2) A chamber filter press operates in a closed system, so badly conditioned sediments can only be discovered by opening the chambers. By this point, there is usually little to no

possibility of addressing and solving the issue if the sediments are severely contaminated (Foged et al. 2007).

3) Dewatering using a chamber filter press requires large quantities of chemical conditioning agents (Government of Ontario 2016). The use of chemicals in conjunction with mechanical processes can become expensive.

Recommendation

Based on the literature review, dewatering using a chamber filter press is recommended as a candidate approach for dewatering materials dredged from Lake Erie when time and space are constrained. If time and space are not a constraint, the chamber filter press can be used as a second step in a full dewatering process (e.g., following lagoon dewatering).

2.8.3 *Plate and Frame Press*

General description

The plate and frame press is another mechanical dewatering method that can be used for dredged materials. The plate and frame press dewaters dredged materials by trapping sediments between stacked layers of filter media and creating a differential pressure to form a cake of fine particulates (Englis and Hunter 2007). Figure 17 shows a schematic of a cross-sectional view of one filter plate and a profile view of the entire plate and frame press.

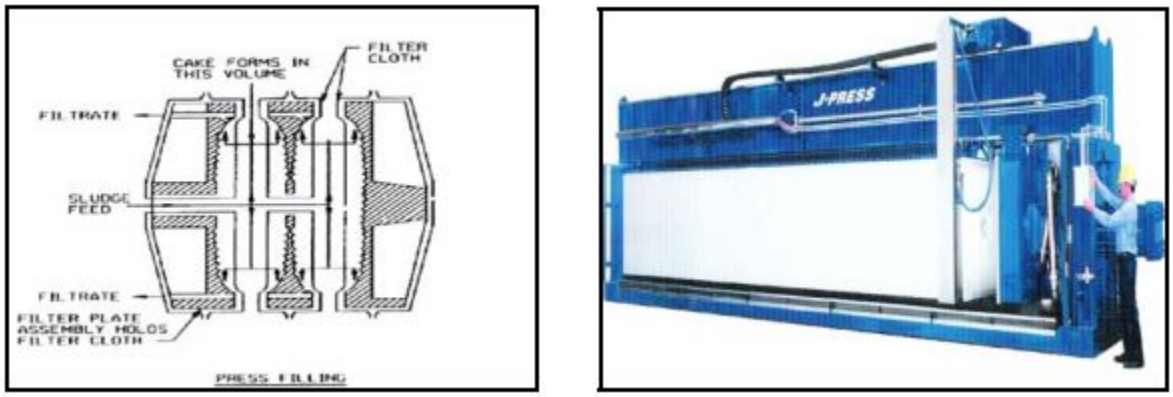

Fig. 17: Plate and frame press schematic (*left*) and plate and frame press (*right*) (Source: Englis and Hunter 2007).

Materials and equipment

This dewatering approach requires one or multiple plate and frame presses as well as chemical agents for conditioning the dredged materials before they are pumped into the press.

General procedure

The dewatering of dredged materials using a plate and frame press follows a four-step process (adapted from Englis and Hunter 2007):

- In Step 1 (known as *filling*), the press is closed, and a chemically enhanced slurry is pumped into the press until all the air is evacuated.
- In Step 2 (known as *filtration*), a steady increase in pressure is exerted on the slurry, and liquids are drained from the dredged materials until a constant pressure is achieved. As cakes of solids begin to consolidate, the filtration rate begins to diminish, and the pumping process is stopped entirely when the full volume of the press is occupied.
- In Step 3 (also called the *blow-down*), air is blown through the press drainage ports to depressurize the press, so that any filtrate remaining within the press can be removed. The solids from the center core are also removed from the press in this step.
- In Step 4 (also known as the *discharge step*), each plate is opened individually so that the cakes can fall into a receiving bin. After the discharge step, the filter media is cleaned and the press is reassembled for the next dewatering cycle.

Advantages and disadvantages of using a plate and frame press

Advantages include but are not limited to:

1) A plate and frame press can yield a high amount of caked solids, and it has a high capture rate for solids (Foged et al. 2007).

2) A plate and frame press has high production rates and does not require a large amount of chemical conditioning.

3) A plate and frame press can be used for a wide range of sediment types.

Disadvantages include but are not limited to:

1) The operation of a plate and frame press requires a reliable and well-planned strategy for thickening the solids.
2) A plate and frame press requires continuous optimization of the chemical treatment program.
3) A plate and frame press has strict operating standards (Englis and Hunter 2007).
4) Multiple plate and frame presses are needed to dewater large quantities of dredged materials.

Recommendation

Based on the literature review, dewatering using a plate and frame press is recommended as a candidate approach for dewatering dredged materials when time and space are constrained. If time and space are not an issue, a plate and frame press can also be used as a second-step in a full dewatering process (e.g., following lagoon dewatering).

2.8.4 *Screw Press*

General description

A screw press is another mechanical dewatering method. The operation of this machine is fairly simple. To obtain dewatered materials, the screw press transports solids in a helical path along a tapered screw (Englis and Hunter 2007). Figure 18 shows a schematic of a common configuration for a screw press. The main components of the screw press include the inlet feed (where the slurry enters the press), the two pressure zones, a screen (used for separating free water from the solid materials), and an outlet pipe (where cakes of solids are collected).

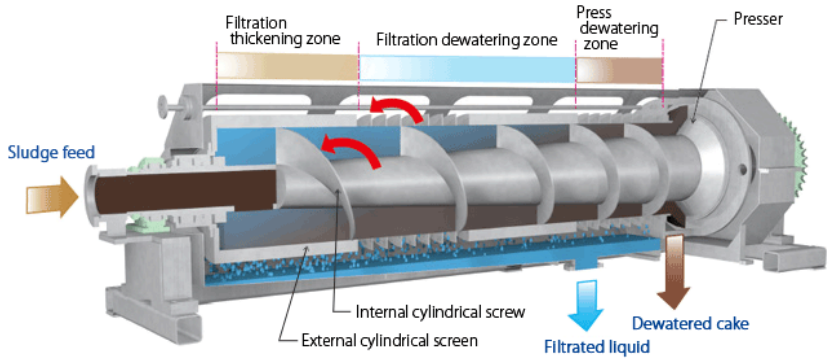

Fig. 18: Screw press (Source: Mitsubishi Kakoki Kaisha, Ltd. 2019).

Materials and equipment

This dewatering approach requires one or multiple sets of screw presses (Figure 1) as well as chemical agents for conditioning the dredged materials.

General procedure

The screw press follows three consecutive steps to dewater dredged materials and produce cakes of solids at the end of the cycle (adapted from Englis and Hunter 2007):

- In the first step, the dredged materials are fed into the machine, and excess free water drains out through a screen.
- Next, the solids travel through a low-pressure zone, where compression occurs as screw blades advance the solids through the machine. Void space is progressively diminished as the screw shaft diameter increases.
- In last step, the solids pass through a high-pressure zone, where an adjustable discharge orifice controls the opening of the machine. This small orifice restricts the rate of discharge of the solids, which in turn exerts pressure on the solids remaining in the screw press, resulting in the production of drier cakes in larger amounts.

When dredged materials are dewatered using a screw press, a variety of configurations and variables can be adjusted to achieve an optimal operation. Such variables include screw length, taper, pitch, screen type/diameter, and the type of chemical additive.

Case study

A case study conducted in Japan by Oida (2007) used an Eco-Screw System, the largest screw press system available at the time. The screw used in the screw press was 1,350 mm in diameter. The system consisted of several large pieces of equipment (including the screw press itself, a backhoe, a crane, a belt conveyor, a paddle mixer and several generators) as well as a gravel pit and a discharge water tank. Figure 19 shows a photograph of the screw press that was utilized during the case study.

Fig. 19: Eco-Screw System, a 1350-mm-diameter screw press in Japan (Source: Oida 2007).

This system was designed to continuously remove water from sediments by using rotating screw blades. Use of this system can be divided into four main processes. The first three processes—which are similar to those outlined above for filter presses or a plate and frame press—involve the sediment entering the press and traveling through the various pressure zones to separate water from the solids. The fourth and final step in the Eco-Screw system involves transporting the collected water to a treatment facility, and the remaining dewatered sediment is removed on belt conveyors for reuse.

In the dewatering phase of the Eco-Screw System, the sediment is compressed via a screw press, and the water content is measured by a cone index. For fill or other civil engineering applications, the cone index for recycled materials is required to be 400 kN/m² or higher. The samples that were dewatered in this study produced a cone index greater than 300 kN/m².

Advantages and disadvantages of using a screw press

Advantages of using a screw press—which are summarized based on the reported case study of the Eco-Screw by Oida (2007) and the screw press study by Englis and Hunter (2007) —include but are not limited to the following:

1) A screw press is able to produce moderate to high amounts of cake solids, has low labor costs, and requires a moderate amount of space.
2) No storage tank is required, because the screw press is able to handle slurry on a continuous basis.
3) The strength of the dewatered sediment can be controlled so as to meet quality requirements by adjusting the rotation rate of the screw blades.
4) Because screw blades typically rotate at a moderate rate, the operation of an Eco-Screw system is quiet and consumes little electric power.
5) The maintenance and cleaning of the system is easier than in other mechanical dewatering methods because punched metal is utilized in the screens as opposed to filter cloths.
6) Using a screw press, it is possible to dewater sediments containing certain amounts of gravel, which is usually not possible using other methods.

Disadvantages include but are not limited to:

1) The configuration of the machinery requires extensive chemical additive evaluation and laboratory testing, and the screw press will most likely need to be used in conjunction with several other presses (Englis and Hunter 2007).
2) A major disadvantage to the Eco-Screw System is the cost and procurement of all the equipment required for operation (Oida 2007).
3) Multiple screw presses are required to dewater a large amount of dredged materials.

Recommendation

Based on the literature review, dewatering using a screw press can be used in conjunction with several other presses (Englis and Hunter 2007).

2.8.5 *Centrifuge*

General description

A centrifuge is a complex piece of equipment designed to use gravitational forces to separate solids and liquids by rapidly spinning the materials (Sullivan and Vesilind 1986). This machine functions similarly to a clarifier, where slurry is spun and denser materials are slung outward and caught on the wall of a giant bowl (Englis and Hunter 2007). There are three types of centrifuges: the solid-bowl decanter, the disc-nozzle, and the basket (Government of Ontario 2016). The components that make up a typical solid-bowl decanter centrifuge include a slurry feed pipe, where materials are injected, a bowl, a scroll or screw conveyor, and separate discharge ports for liquids and solids (Englis and Hunter 2007). Figure 20 shows a schematic diagram of these elements.

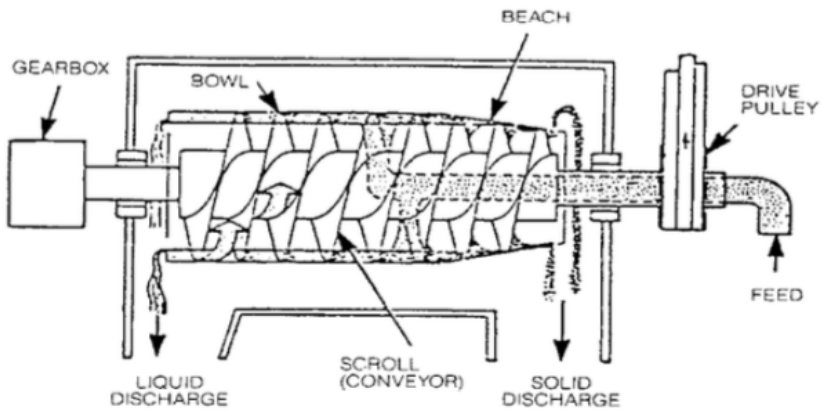

Fig. 20: Solid bowl centrifuge (Source: Water Environment Federation 1996).

Materials and equipment

This dewatering approach requires one or multiple sets of centrifuges as well as chemical agents for conditioning the dredged materials.

General procedure

Mechanical dewatering process using a centrifuge has the following steps (adapted from Englis and Hunter 2007):

- First, the dredged materials enter the center of the bowl. As rotational speed of the bowl is increased, the materials are thrust against the sides of the bowl, and centrifugal forces act to separate the solids from the water.
- Next, a scroll or conveyor (which rotates at a different speed than the bowl) moves solids away from the water. During this step, the solids are further dewatered as they are transported to the discharge port, since the solids begin to impose resistance on the machine. As the rotational speed of the bowl continues to increase, the solids are forced to exit the bowl at the end of the tapered section of the centrifuge. The solids discharge port can be seen in Figure 1.
- In the last part of the process, as the water level builds in the centrifuge, water flows within the machine and is discharged through the liquid discharge port at the opposite end of the bowl.

The dewatering efficiency of a centrifuge is influenced by the differential rotational speeds of the bowl and the scroll, the dosage of chemical additives, and the slurry feed rate. A higher bowl speed induces larger centrifugal forces. However, as larger gravitational forces are applied, the settled solids become more difficult to remove (Government of Ontario 2016). An increase in bowl speed leads to an increase in abrasion damage, noise, and vibration within the centrifuge. In contrast, a lower bowl speed results in minimized internal wear, lower noise levels, and lower power requirements (Government of Ontario 2016). In addition, a lower bowl speed can achieve a higher solid capture rate and can minimize the acceleration and turbulence within the centrifuge. However, using a lower bowl speed will require a larger amount of chemical additives to be added to the slurry (Government of Ontario 2016).

Advantages and disadvantages of using a centrifuge

The advantages of using a centrifuge include but are not limited to:

1) A centrifuge is capable of producing cakes that are moderately high in solids, with a high solids capture rate (Englis and Hunter 2007).

2) A centrifuge is a good option when the solid materials contain high levels of oil and grease, as it is fairly easy to separate these two substances using centrifugal force (Englis and Hunter 2007).

3) Dewatering using a centrifuge can be performed as a continuous process and is a viable option where space limitations exist (Foged et al. 2007).

Disadvantages of a centrifuge include but are not limited to:

1) A skilled operator is required for the centrifuge, and maintenance can be problematic due to the complexity of the machinery, which will result in high maintenance costs over time (Englis and Hunter 2007).

2) The power cost associated with the centrifuge is high.

3) Additionally, any abrasive materials entering the bowl can cause excessive wear on the machine, shortening its life span and making it less suitable for heavy duty applications (Foged et al. 2007).

4) A centrifuge is not ideal for slurries containing very fine particles or sediments with low inorganic or fiber content. Unlike most filter presses, a centrifuge is not able to dewater all types of sediment (Englis and Hunter 2007).

Recommendation

Based on the literature review, dewatering using a centrifuge should only be used when filter presses are not available.

2.8.6 *Benefit and Cost for Mechanical Dewatering*

Foged et al. (2007) conducted a price comparison between lagoon dewatering and mechanical dewatering. They concluded that the investment cost for a lagoon is low and its operational cost is high. In contrast, the investment cost for mechanical dewatering is high because of the purchase price of the equipment, while the operational cost is low. They further quantified the cost of lagoon at 32.50~49.00 Euros per ton of dredged materials and the cost of mechanical dewatering at 28.00~31.50 Euros per ton of dredged material. Some factors, such as land concession, are not considered in this cost estimate.

Similar to sludge thickening, multiple pieces of equipment are needed to dewater a massive amount of dredged materials when using a mechanical dewatering approach. The total operation cost also includes costs for conditioning chemicals, power and maintenance, which can be high.

2.9 Chemical Treatment

General description

Dewatering using chemical treatment utilizes the chemical reactions to modify the chemical composition of the dredged materials so that their properties will make them more prone to dewatering and suitable for beneficial use. The properties of the materials that require modification in the chemical dewatering are the number of colloidal particles, the electrical charge (materials with net negative charges have particles that repel each other) and the water content of the materials (Government of Ontario 2016).

In the dredging and dewatering projects, fines (or fine-grained materials) in the dredged materials tend to remain in suspension and their particles are resistant to agglomeration (through processes such as coagulation and flocculation). In this regard, chemical treatment of dredged materials can induce agglomeration through the introduction of chemical additives, including natural organic compounds (such as chitin), inorganic products (such as lime, ferric chloride and aluminum sulfate), and synthetic organic compounds known as polymers (such as coagulants and flocculants) (Englis and Hunter 2007). It has been reported that the use of coagulants and/or flocculants is often the only viable method to ensure a successful and cost-effective dewatering project (Englis and Hunter 2007).

In general, chemical treatment is used in conjunction with other dewatering techniques—such as in hydraulic basins, mechanical dewatering and ground improvement—or it can be used as one stages in a larger dewatering process. The role of chemical treatment is to produce homogenous concentrations of uniform solids at a constant rate and also cause the dredged materials to release excess water (Englis and Hunter 2007). By adding flocculants and other chemical agents to dredged materials, the naturally occurring processes of settling and thickening can be accelerated that would otherwise require a significant amount of time and physical space. However, an accelerated process using chemical agents requires large, environmentally isolated ponds or mechanical thickening devices, as described previously (Englis and Hunter 2007).

Lime Treatment

Among the various chemical agents that can be used in dewatering, lime is considered as a feasible additive for the dewatering of materials dredged from Lake Erie. Lime (either by itself or in combination with other materials), has been used to treat a range of soil types (Figure 21). Lime in the form of quicklime, hydrated lime or slurry lime can be used to treat weak soils. Generally, application of lime at 1~4 percent is sufficient to dry a wet site (National Lime Association 2004). In addition to its effectiveness for dewatering, lime treatment is known to significantly improve soil workability and short-term strength.

Quicklime (which has a chemical reaction with water, producing hydrated lime and giving off heat), is known to be effective for drying wet soils. When any amount of clay is present in a soil, the chemical reaction of hydrated lime with clays will further dry the soil and permanently transform they clays in the soil into a strong cementitious matrix. The drying of wet soils using quick lime occurs quickly, generally in a matter of hours, which is more efficient than allowing soil to dry through natural evaporation (National Lime Association 2004).

Slurry lime can be produced from quicklime or hydrated lime, by mixing them with water provided by integral paddles, compressed air, and/or recirculating pumps. The slurry created from quicklime is hot because the chemical reaction between quicklime and water is exothermic, while the slurry created by mixing hydrated lime and water is not hot. Slurry lime is not feasible for drying applications (National Lime Association 2004).

Considering that dredged materials have high moisture content, quicklime and hydrated lime can be used to dry up dredged materials that contain clay and silt, which are common components of the materials dredged from Lake Erie. The use of lime kiln dust is another alternative for chemical treatment (National Lime Association 2004).

Fig. 21: Lime–soil stabilization (Source: *The Constructor* 2019).

Materials and equipment

Chemical treatment requires the following:

- Chemical additives, including natural organic compounds (such as chitin), inorganic products (such as lime, ferric chloride and aluminum sulfate), and synthetic organic compounds known as polymers (such as coagulants and flocculants), and
- Equipment for mixing, blending and spreading the additives.

General procedure

For dewatering by progressive trenching, lime can be more efficiently spread by using a Riverine Utility Craft (as shown in Figure 5) and/or an amphibious vehicle with a spreader attached to the back. The lime is left to sit for 1 to 2 hours before being mixed into the soils using an amphibious excavator or a few passes of an RUC and/or an amphibious vehicle.

When dewatering is performed using a mechanical device, the lime is generally added into the dredged materials just prior to mechanical treatment.

Case study

Experimental research on chemical treatment in combination with geotextile tubes for the dewatering of contaminated sludge dredged from the bottom of a lake was reported by Hu and Fan (2012). In this study, seven flocculating agents were used to determine the optimal flocculant and dosage that can best assist in accelerating the dewatering process. The flocculant agents were all macromolecules, whose properties were affected by factors like the mixing process, the molecular weights and distribution, pH, concentration, and electrolyte content. Of the seven flocculants used in the experiments, four were industrial compounds and three were analytical compounds. The four industrial compounds were cationic polyacrylamide (CPAM), anionic polyacrylamide (APAM), polyaluminium chloride (PAC), and polyferric chloride (PFC); the three analytical compounds were sodium silicate liquid ($Na_2O{\cdot}mSiO_2$), N-acetyl threonine $(C_6H_{11}NO_4)_n$, and trisodium citrate ($C_6H_5Na_3O_7$).

In the experiment by Hu and Fan (2012), the types and quantity of the flocculants were determined by the following steps:

1) Pre-determined doses of the seven flocculants were added to beakers;

2) The mixtures were rapidly stirred (200 rpm for 20 sec), followed by a period of slow stirring (100 rpm), followed by a few minutes to allow precipitation;

3) The mixtures were added to mechanical dewatering equipment, and the moisture content of flocculation and the moisture content of the mud cake were determined after extraction filtration for two minutes; and

4) The settlement height was measured after a period of 20 minutes. The flocculation group size, the appearance of the upper liquid, the water content, and the precipitation phenomena were also noted.

The optimum agent was selected based on the height of the settlement after 20 minutes, the flocculation group size, the appearance of the upper liquid, the water content, and the precipitation phenomena. After the optimal flocculating agent was selected, this four-step process was repeated to obtain the flocculant concentration that produced the best results in order to recommend the

optimal dosage. In this study, the authors recommended to use two flocculating agents, YJ1 and YJ2, at dosages of 90~200 mg/L and 600~620 mg/L, respectively.

This experiment provided a detailed procedure for the experimental determination of the optimal flocculating agent to aid in the dewatering process. However, it should be noted that the dosage can be deferent depending on the type of dredged materials, and field work may not be able to precisely mix the best dosage with the dredged materials.

Benefit and cost

Some chemical agents can be costly, but they can accelerate the dewatering if a reasonable percentage of chemical additives added into the slurry. Some chemical additives are commercially available, while others may take advantage of industrial waste. For example, quicklime can cost $117.80 per metric ton (source: USGS 2011), and hydrated lime can cost $140.60 per metric ton (source: TexDOT 2015).

Advantages and disadvantages of chemical treatment

Advantages include but are not limited to (based on National Lime Association 2004):

1) The use of chemical additives can accelerate the dewatering of dredged materials.

2) Dry lime can be applied more rapidly than slurry.

3) Dry quick lime is economical because quicklime is a more concentrated form of lime than hydrated lime.

4) Quicklime requires 32 percent of its weight in water to convert to hydrated lime, and therefore it is very suitable for high moist dredged materials and can bring significant additional evaporation loss due to the heat of hydration.

Disadvantages include but are not limited to (based on National Lime Association 2004):

1) The use of chemicals in conjunction with mechanical processes can become expensive.

2) Dry hydrated lime can be used for drying clay, but it is not as effective as quicklime.

3) Hydrated lime particles are fine-grained particles, which means dust is a problem and it is unsuitable for populated areas. The relevant personnel also need personal protective equipment (PPE).

4) Quicklime may require more mixing than dry hydrated lime or lime slurries.

Recommendation

There are several chemical manufacturing companies that develop a variety of products to assist with the dewatering of solids. It is recommended that the chemical treatment can be used in conjunction with progressive trenching and/or mechanical dewatering for the projects in Ohio.

2.10 Vegetative Dewatering

General description

Vegetative dewatering utilizes the transpiration capacity of plants to dewater and dry fine-grained dredged materials. The transpiration from plants is also accompanied by evaporation from the surface of the dredged material. This dewatering process enhances the separation of water and solids through the use of different types of vegetation. Haliburton (1978) surveyed the literature (Eleuterius 1972) and selected four species of marsh grass for a field study: panic grass (various species of the genus *Panicum*), smooth cordgrass (*Spartina alterniflora*), big cordgrass (*Spartina cynosuroides*) and common reed (*Phragmites australis*).

To be useful in a dewatering operation, vegetation should have the following characteristics: it should be a hardy perennial that is inexpensive and easy to establish, be capable of rapid growth with minimum maintenance and fertilization, be able to maintain a high transpiration rate; be a fast spreading plant with a thick root mat and a low profile, and be a type of plant that will cause minimal interference in the future use of site (Haliburton 1978). In addition, it is a general rule of thumb that a native species is used rather than an imported species that is potentially invasive.

Vegetative dewatering of dredged materials has been used for habitat restoration and shoreline restoration. In 2002, an erosion control study was conducted in Presque Isle, Pennsylvania. This study incorporated the beneficial reuse of dredged materials and the installation

of indigenous vegetation along the shoreline of Lake Erie (Comoss et al. 2002). Figure 22 shows a schematic of the proposed erosion control system.

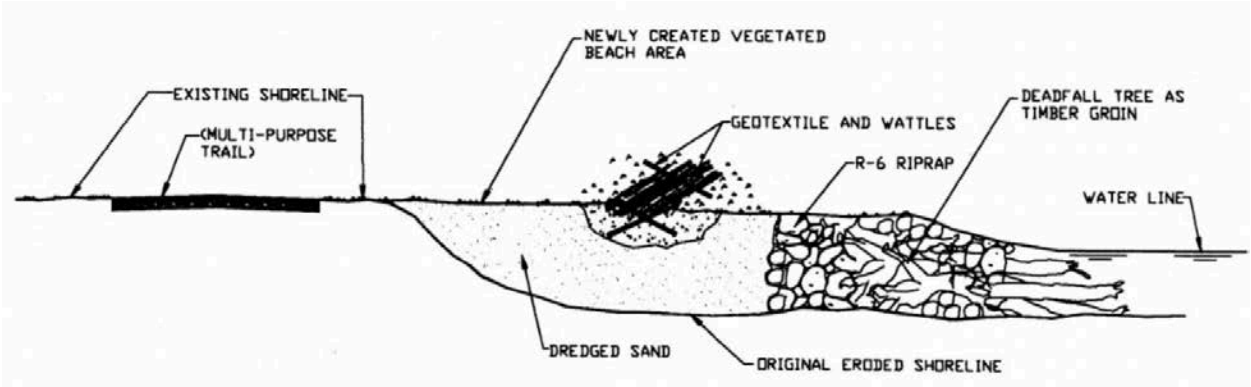

Fig. 22. Erosion Control System on Lake Erie Shoreline (Source: Comoss et al. 2002).

Materials and equipment

Since native vegetation will vary from region to region, the selection of the most suitable transplant materials to use is performed on a case-by-case basis.

General procedure

Since it is costly to transplant vegetation over a large disposal area, Haliburton (1978) suggested that vegetative dewatering should rely on natural processes of plant colonization and succession. After the natural vegetation has become established, continuous efforts should be made to control any undesirable species and promote the growth of native species.

Case study

Haliburton et al. (1978) reported a case study of vegetative dewatering at Mobile, Alabama, where the annual rainfall is high and the growing season is long. In this field demonstration, the four marsh grasses (panic grass, smooth cordgrass, big cordgrass and common reed) were used as planting materials. After a reasonable amount of time was allowed for the plants to grow, the effect of the dewatering was analyzed. As indicated in the research report, this field demonstration project was reported to be unsuccessful, mainly because the transplanting was conducted at the wrong time of year, the climatic conditions were unfavorable, and the level of salinity of the test plots was significantly higher than expected (Haliburton et al. 1978). In addition, an invasive vegetative cover flourished and prevented measurable growth of the transplanted species. It was concluded

that this demonstration project was academically inconclusive and was not cost-effective (Haliburton et al. 1978). A literature review on case studies of other vegetative dewatering projects can be found in Howard (2019).

Benefit and cost

Given that a site has sufficient capacity in terms of soil support for conducting a transplant operation, the cost of transplanting in a large disposal area can be very high (Haliburton et al. 1978). In 1978 dollars, the cost of vegetative dewatering was determined to be $1,100 per hectare.

Advantages and disadvantages of vegetative dewatering

Advantages of vegetative dewatering include but are not limited to:

1) Natural vegetation can be less expensive.
2) Vegetative dewatering can be combined with habitat restoration activities.

Disadvantages include but are not limited to:

1) Artificially planting in large disposal sites can be very costly.
2) The dewatering technique highly relies on the climate at the site and the season of the year, as the timing of transplanting operations is critical. If plants are installed in late spring and summer, dewatering at the site may have a very low chance of success (Haliburton et al. 1978).
3) The amount of dredged material dewatering by vegetation (obtained from measurements made in the case study by Haliburton et al. 1978) is minimal.

Recommendation

Considering the weather conditions in Ohio and the effectiveness of vegetative dewatering as indicated from the literature review, the vegetative dewatering technique is not recommended for materials dredged from Lake Erie unless a species of vegetation can be identified that can effectively dewater the material or there is an urgent need for habitat restoration or shoreline restoration.

3. SYNTHESIS OF DEWATERING OF DREDGED MATERIALS

3.1 Decision Tree for selecting dewatering techniques

The extensive literature view (Chapter 2) informed the development of a preliminary decision tree for selecting cost-effective techniques for rapidly dewatering materials that are dredged from the Ohio harbors of Lake Erie. Numerous factors need to be considered in the decision to select a dewatering technique, including but not limited to: footprint or available site space; time and/or seasonal constraints; type of dredged materials; availability of labor, equipment and chemical additives; and, most importantly, cost. Figure 23 shows the decision tree developed in this study for selecting the optimum dewatering technique based on the various influence factors under consideration.

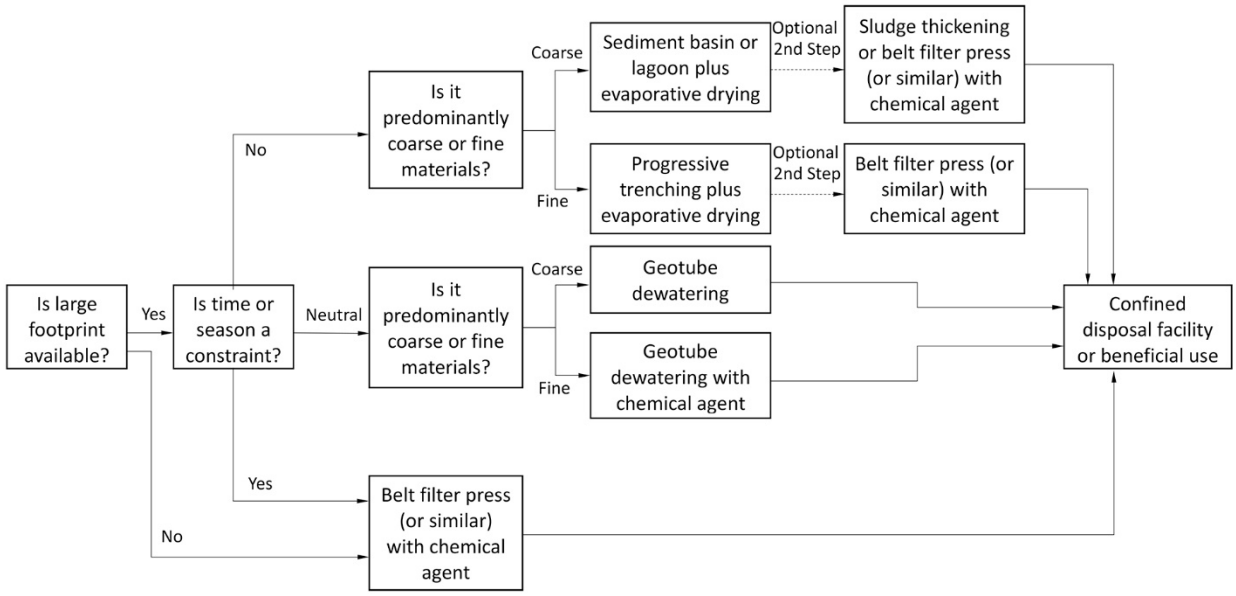

Fig. 23: A decision tree for selecting the optimum dredged material dewatering technique.

As shown in Figure 23, this decision tree has three major "branches." The top branch utilizes a hydraulic approach or a ground improvement approach. The middle branch refers to an approach that utilizes geotextile tube dewatering. The bottom branch relies on approaches that use various mechanical dewatering devices. The process of decision making begins with the first influence factor: the footprint, as shown in the beginning node, "Is large footprint available?" In this regard, an existing facility in Ohio such as the *Great Lakes Dredged Material Center for*

Innovation near the Port of Toledo (Figure 24) provides a spacious site for field demonstration research projects and can be directly used for dewatering projects.

If a large footprint is available (the "Yes" branch in the top row of the decision tree), the second factor to consider is available time and seasonal factors. If timing and climate are not a key issue (the "No" branch), the third factor that is used to further refine the selection is the type of the dredged materials (i.e., the node "Is it predominantly coarse or fine materials?"). Next, if the dredged materials are predominantly coarse grains, such as the materials dredged from sediments near the Port of Cleveland, dewatering approaches such as sediment basin and/or lagoon with a combination of evaporative drying can be considered. If the dredged materials are predominantly fine grains, such as the materials dredged from sediments near the Port of Toledo, progressive trenching combined with evaporative drying is recommended. As indicated by a field demonstration project that was conducted decades ago (Haliburton et al. 1978), progressive trenching combined with evaporative drying is a cost-effective and operationally simple methodology. To accelerate the dewatering, chemical additives such as lime can be used in the progressive trenching stage. Haliburton et al. (1978) suggested that progressive surface trenching should be considered initially by all agencies. When it is not feasible to use progressive trenching, vacuum-assisted underdrainage dewatering can be used. When progressive trenching is not feasible or available, the node in the decision tree for "progressive trenching plus evaporative drying" can be replaced with "vacuum-assisted underdrainage dewatering."

Fig. 24: Great Lakes Dredged Material Center for Innovation near Port of Toledo (Source: Ohio EPA; undated).

As mentioned in Chapter 2, even after completing treatment in a sediment basin, a lagoon, or a progressive trenching system, the dewatered materials can still have a high moisture content, and this needs to be reduced before the materials can be deposited or beneficially used. Thus, a second step of dewatering using equipment for sludge thickening (e.g., gravity belt thickener, or rotary drum thickener) or for mechanical dewatering (e.g., belt filter press or a similar device as described in Chapter 2) can be performed. In this second step, the use of chemical agents can be used to expedite the dewatering. At this point, we have reached the end of the top branch in the decision tree.

Next, as shown in the middle branch in Figure 23, if the timing and climate constraints are not stringent (termed "Neutral" here), geotextile tube dewatering can be used, because it is a fast method of mechanical dewatering. This approach requires a relatively large footprint, but it is faster than using a sediment basin, a lagoon, or a progressive trenching system. If the dredged materials contain a substantial amount of fine grains, chemical conditioning is needed (such as the use of lime). Given a sufficient amount of time to allow for drainage, the remaining dry solids can be excavated and transported to other sites for confined disposal or beneficial use. The third sub-scenario in this middle branch is that available time or season is a constraint (the "Yes" sub-branch). This sub-scenario leads to the bottom branch in the decision tree.

The bottom branch in the decision tree (shown in Figure 23) is suitable for a scenario where both the available footprint and time are constraints. In such a scenario, dewatering approaches that use various mechanical devices can be considered. To accelerate the dewatering, chemical additives such as lime can be incorporated into the dredged materials prior to treatment in the mechanical device. The belt filter press, which is more versatile than other mechanical dewatering methods and can dewater most types of sludge, is initially recommended. However, other mechanical dewatering devices (e.g., chamber filter press, plate and frame press, screw press, centrifuge, etc.) are also good candidates for consideration in certain cases. The final decision regarding what mechanical dewatering approach to use will depend on factors such as the budget available for purchasing equipment and electrical power, availability of existing equipment and facilities, maintenance costs, site location, availability of experienced personnel, availability of equipment rentals (especially for large pieces of equipment such as cranes) as well as vendors or subcontractors who can supply and operate such equipment.

3.2 Beneficial use of dredged materials for shoreline erosion control

Among the widely-used dredged material dewatering techniques that are synthesized in this study, several dewatering approaches can also be used in conjunction with shoreline erosion control, including but not limited to direct placement, chemical treatment, use of geotextile tubes filled with dredged materials. A more detailed discussion of each is provided below.

Direct placement

Dredged materials, either untreated or treated, can be used for shoreline erosion control and restoration of eroded shorelines. In some places, it is feasible to dump/place materials (preferably sand-rich materials) dredged from nearby river channels or ports on eroded shorelines as a sustainable and low-cost nourishment method. Recent research on coastline erosion of the Nile Delta in Egypt reveals that the direct placement of dredged materials on eroded shorelines was the most effective choice to enhance the stability of shoreline (Bahgat 2018). Their research also shows that the shoreline erosion rate can be reduced and, thus, the shore stability can be improved by increasing the rate at which the dredged materials are applied to the shorelines and/or increase the quantity of the dredged materials that are placed.

Chemical treatment

Chemically treated dredged materials can be used in shoreline erosion control and repair of eroded shorelines. The dredged materials are first moved to a mixing site and mixed with chemical additives. Lime is a suitable additive for materials with high clay content, while lime-pozzolan (e.g., fly ash) mixtures are suitable for materials with low clay content. The dredged materials should be dewatered to a moisture content of 1~3% above the optimum moisture content to ensure that sufficient water is available for the lime reaction to occur and that the subsequent compaction will be near the optimum moisture content. After being mixed with lime, stockpiled and mellowed, the treated materials are transported to the shoreline to be shaped and compacted in multiple lifts.

Use of geotextile tubes filled with dredged materials

Geotextile tube technology has proven to be an economical alternative to the hard solutions for shoreline erosion such as rock revetments, walls and breakwaters (Tayade et al. 2015). Compared to the other two beneficial uses of dredged materials in shoreline erosion control, the combination

of geosynthetics and dredged materials can be a much more sustainable and environmentally friendly approach. Geotextile tubes that are hydraulically or mechanically filled with dredged materials for dewatering are also good for protection against shoreline erosion. The relevant research has been widely reported in the literature (e.g., Fowler et al. 1995, 2002; Mori et al. 2002; Shin and Oh 2007). Figure 25 shows an example of the successful application of geotextile tubes for coastal protection, in which natural sediment accumulated shoreward of the geotextile tubes. Shin and Oh (2007) reported a case study of using geotextile tubes filled with dredged materials as breakwaters (Figure 26). Their research shows that using two double-lined geotextile tubes installed at zero water depth above the crest was found to be the most stable and effective for wave absorption than other proposed designs. It should be noted that every site is unique, and thus each design that uses dredged material–filled geotextile tubes for shoreline protection is case-specific. The functionality and service life of the geotextile tubes are significantly influenced by the depth of placement and their alignment (Tayade et al. 2015).

Fig. 25: Applications of geotextile tubes for coastal protection: A geotextile tube induces wave breaking to attenuate energy (*left*), and a natural sediment accumulation zone shows the amount of sand gained shoreward of the geotextile tubes (*right*) (Source: Alvarez et al. 2007).

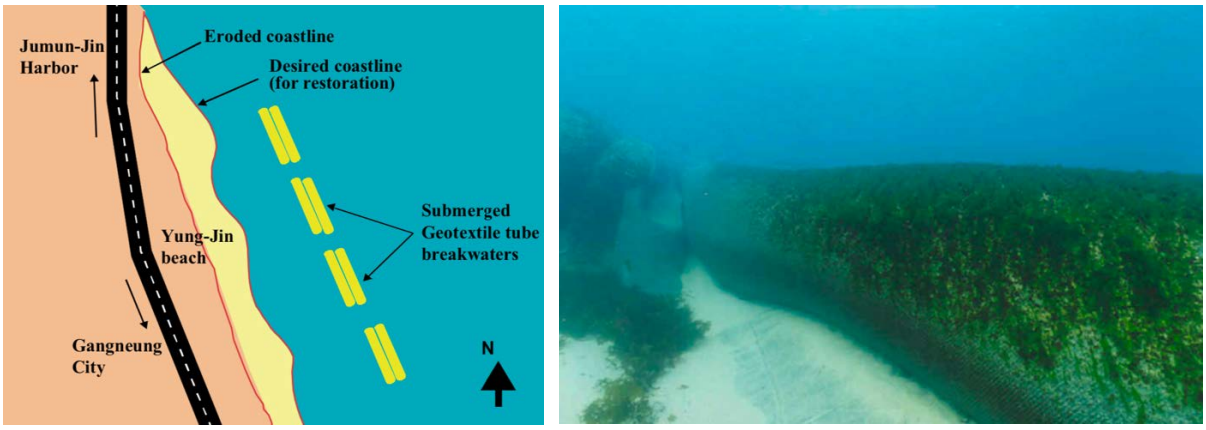

Fig. 26: Use of geotextile tubes filled with dredged materials for shoreline protection at Young-Jin Beach, South Korea: Site plan (*left*) and seaweed covering the geotextile tubes (*right*) (Source: Shin and Oh 2007).

4. SUMMARY AND CONCLUSIONS

In the context of Senate Bill 1, which no longer permits open water placement of dredged materials in Lake Erie by 2020, this project was conducted to study the current practices for rapid dewatering of dredged materials, which is generally the very first step in a process leading to confined disposal or beneficial use. The research team performed a comprehensive literature review on several commonly used dewatering techniques for dredged materials, including hydraulic placement, ground improvement approaches, mechanical dewatering techniques, chemical treatment, and biological methods. For each of these categories, two or more detailed dewatering techniques are reviewed, including a general description, the required materials and equipment, the general procedure, a case study (if any exists), benefit and cost, and advantages and disadvantages. A recommendation for each dewatering technique was made for use by agencies and stakeholders.

In practice, it is challenging to determine a universal dewatering technique that can be used for all sites. For example, the content of dredged materials from the Port of Toledo is different from that of dredged materials from the Port of Cleveland. There are numerous factors that dominate the determination of the most suitable dewatering technique in the decision making, including but not limited to footprint or site space; time and/or climate constraint; type of dredged materials; availability of labor, equipment and chemical additives; and cost. By considering these factors, a synthesis of information in studies in the literature was used to inform the development of a decision tree for selecting an optimum dewatering technique.

This decision tree outlines potentially effective dewatering techniques in three main branches, as decisions can be made logically based on factors in a certain sequence: 1) available footprint for the project, 2) time/seasonal constraints, and 3) the type of dredged materials being considered. It is known that the best solution for dewatering a specific type of dredged material can be a combination of two or more methods. As such, the decision tree also implies a full cycle of dewatering projects. This decision tree can serve as a toolbox for local agencies/stakeholders to use in their decision making and/or the development of field demonstration projects.

For the beneficial use of dredged materials, the research team also identified several approaches that are associated with dewatering projects, including the direct placement of dredged materials on eroded shorelines, chemical treatment and compaction for shoreline restoration, and the use of geotextile tubes filled with dredged materials for shoreline erosion control.

REFERENCES

Alvarez, I.E., Rubio, R., and Ricalde, H. (2007). Beach restoration with geotextile tubes as submerged breakwaters in Yucatan. Mexico. *Geotextiles and Geomembranes*, 25, 233–241.

Bahgat, M. (2018). Optimum use of dredged materials for sustainable shoreline management in Nile Delta. *Water Science*, 32, 115-128.

BDP Industries (2019). Gravity Belt Thickener Sludge Thickening Equipment. BDP Industries, Greenwich, New York. Available at https://www.bdpindustries.com/products/gravity-belt-thickener/ . Accessed August 1, 2019.

Cheromcha, Kyle. (2017) "This Fully-Restored, Screw-Driven, Amphibious Truck Is Practically Unstoppable" (Web page). The Drive. October 10. Available at https://www.thedrive.com/watch-this/14987/this-fully-restored-screw-driven-amphibious-truck-is-practically-unstoppable Accessed August 2, 2019.

Comoss, E. J., Kelly, D.A., and Leslie, H.Z. (2002). Innovative erosion control involving the beneficial use of dredge material, indigenous vegetation and landscaping along the Lake Erie shoreline. Ecological Engineering, 19(3), 203-210.

Dredge America (2019). "Dewatering" (Web page). Dredge America, Kansas City, Missouri. Available at https://dredgeamerica.com/services/dewatering/ Accessed on August 1, 2019.

Eleuteriusm L.N. (1972). A study of plant establishment on spoil areas in Mississippi sound and adjacent waters. Final Report Contract No. DACW01-72-C-0001, U.S. Army Engineer District, Mobile, Alabama.

Englis, M., and Hunter, W. (2007). A description of sediment dewatering methods. Proceedings of WODCON XVIII, 27 May - 1 June 2007, Lake Buena Vista, Florida, USA.

Estes, T.J., and McGrath, C.J. (2014). Economical treatment of dredged material to facilitate beneficial use. Final report ERDC/EL TR-14-11. The US Army Corps of Engineer Research and Development Center, Vicksburg, Mississippi.

Farm and Dairy (2011). One third of Lake Erie coast is impacted by erosion. January 2. https://www.farmanddairy.com/news/one-third-of-lake-erie-coast-is-impacted-by-erosion/19606.html

Foged, S., Duerinckz, L., and Vandekeybus, J. (2007). An Innovative and Sustainable Solution for Sediment Disposal Problems. Proceedings of WODCON XVIII Conference, Lake Buena Vista, Florida. World Organization of Dredging Association. pp. 1513–1527. Available at https://www.westerndredging.org/phocadownload/ConferencePresentations/2007_WODA_Florida/Session9A-SedimentDewateringTreatmentAndDisposal/6%20-%20Foged%20-%20An%20Innovative%20and%20Sustainable%20Solution%20for%20Sediment%20Disposal%20Problems.pdf

Fowler, J., Toups, D., and Gilbert, P. (1995). Geotextile contained contaminated dredged material, Marina Del Ray, Los Angeles and Port of Oakland, California. In: 14th World Dredging Congress, Amsterdam, The Netherlands.

Fowler, J., Duke, M., Schmidt, M.L., Crabtree, B., Bagby, R.M., and Trainer, E. (2002). Dewatering sewage sludge and hazardous sludge with geotextile tubes. In: Proceedings of the Seventh Inter- national Conference on Geosynthetics, 7 ICG-NICE, France, vol. 3. pp. 1007–1012.

Government of Ontario (2016). The Design Guidelines for Sewage Works. 1st ed., vol. 1 1, Queen's Printer for Ontario, www.ontario.ca/document/design-guidelines-sewage-works/sludge-thickening-and-dewatering.

Gulf Boring Engineering Est. (2019) “Well Point System” (Web page). Gulf Boring, Sharjah, United Arab Emirates. Available at https://www.gulfboring.com/well-point-system.html

Haliburton, T.A., Palermo, M.R., Chamlee, R.M., West, A.W., Spotts, J.W., Lytton, R.L., Gatz, J.L., Willoughby, W.E., Hammer, D.P., Douglas, P.A., O’Bannon, C.E., and Stout, J.P. (1978). Dredged Material Dewatering Field Demonstrations at Upper Polecat Bay Disposal Area, Mobile, Alabama. Dredged Material Research Program, Technical Report D-78-59.

McLaughlin, R. (2015). Using Baffles to Improve Sediment Basins. North Carolina State Extension Publications. Available at http://content.ces.ncsu.edu/using-baffles-to-improve-sediment-basins

Han, J. (2015). *Principles and Practice of Ground Improvement.* 1st edition. Hoboken, New Jersey: John Wiley & Sons.

Harmony Suites (2019) "Stages of Construction" (Web page). Harmony Suites, Sunny Beach, Bulgaria. Available at https://www.harmony-suites.com/stage-of-construction

Hillebrand, Steve (2013). Image title: Building duck wing terraces with heavy veachles. U.S. Fish and Wildlife Service, Washington, D.C. Available at http://www.public-domain-image.com/public-domain-images-pictures-free-stock-photos/transportation-vehicles-public-domain-images-pictures/building-duck-wing-terraces-with-heavy-veachles.jpg

Howard, E. (2019). "Stabilization of Dredged Materials in Ohio – An Investigation of Mechanical, Chemical and Biological Dewatering Techniques." The University of Akron Williams Honors College, Honors Project Report. Available at https://ideaexchange.uakron.edu/cgi/viewcontent.cgi?article=1941&context=honors_research_projects

Hu, B. and Fan, W. (2012). Experimental Research on Combination Technics of Geotextile Tube in Mud Dewatering for Environmental Dredging Project. In: Proceedings of the 2012 International Conference on Biomedical Engineering and Biotechnology, May 28–30, Macau, China. pp.1453–1458. DOI: 10.1109/iCBEB.2012.202

Li, L.H., Wang, Q., Wang, N.X., and Wang, J.P. (2009). Vacuum dewatering and horizontal drainage blankets: a method for layered soil reclamation. Bulletin of Engineering Geology and the Environment 68(2): 277–285. DOI: 10.1007/s10064-009-0200-7.

Mastin B.J. and Lebster, G.E. (2007). Use of geotextile dewatering containers in environmental dredging. Proceedings of WODCON XVIII, Orlando, Florida.

Mitsubishi Kakoki Kaisha, Ltd. (2019). "High-efficiency Differential Rotation Screw Press" (Web page). Mitsubishi Kakoki Kaisha, Ltd., Kawasaki, Japan . Available at http://www.kakoki.co.jp/english/products/e-019/index.html. Accessed on August 1, 2019.

Moody, M. (2019). Investigation of Dredge Material Dewatering Through Hydraulic and Ground Improvement Methods. Honors Project Report for The University of Akron Williams Honors College. https://ideaexchange.uakron.edu/honors_research_projects/830

Mori, H., Miki, H., and Tsuneoka, N. (2002). The use of geo-tube method to retard the migration of contaminants in dredged soil. In: Geosynthetics: State of the Art, Recent Developments: Proceedings of the Seventh International Conference on Geosynthetics, Vol. 3. pp. 1017–1020.

National Lime Association (2004). Lime-Treated Soil Construction Manual: Lime Stabilization & Lime Modification. Bulletin 326. National Lime Association, Arlington, Virginia. January.

Ohio Department of Natural Resources (ODNR; 2006) Rainwater and Land Development: Ohio's Standards for Stormwater Management, Land Development and Urban Stream Protection, 3rd Ed. Ohio Department of Natural Resources, Division of Soil and Water Conservation, Columbus, Ohio. Available at http://oilandgas.ohiodnr.gov/portals/oilgas/pdf/stormwater/RLD_11-6-14All.pdf

Ohio Environmental Protection Agency (Ohio EPA; undated). Great Lakes Dredged Material Center for Innovation: Toledo, Ohio (Presentation). Available at https://epa.ohio.gov/Portals/33/documents/dredge/AgriculturalUses.pdf

Oida, T. (2007). Continuous Dewatering System for Dredged Sediment with High Water Content. Western Dredging Association, Bonsall, California. Available at: www.westerndredging.org/phocadownload/ConferencePresentations/2007_WODA_Florida/Session9ASedimentDewateringTreatmentAndDisposal/5%20-%20Oida%20-%20Continuous%20Dewatering%20System%20for%20Dredged%20Sediment%20with%20High%20Water%20Content.pdf

Outotec (2016). Beginners Guide to Thickeners. Minerva – Newsletter for Minerals Processing Professionals, Issue 3. Outotec Ouj, Espoo, Finland. Available at https://www.outotec.com/company/newsletters/minerva/minerva-issue-3--2016/beginners-guide-to-thickeners/

Parkson Corporation (2019). "ThichTech™ Rotary Drum Thickener" (Web page). Available at https://www.parkson.com/products/thicktech . Accessed August 1, 2019.

Perez, M., Fang, X., Zech, W.C., and Vasconcelos, J. (2015). Design and Construction of a Large-Scale Sediment Basin and Preliminary Testing Results. Highway Research Center, Auburn, Alabama. August.

Perez, M.A. (2016). Improvements in the Design and Application of Erosion and Sediment Control Technologies for the Construction Industry. PhD dissertation. Auburn University, Dept. of Civil Engineering, Auburn, Alabama. Available at https://etd.auburn.edu/handle/10415/5443

Popin, Gabriel (2015). Fourteen percent of U.S. coastline is covered in concrete. *Science*, Aug. 18. DOI:10.1126/science.aad1639. Available at http://www.sciencemag.org/news/2015/08/fourteen-percent-us-coastline-covered-concrete

P.T. Geotechnical Systemindo (2016). "Geotextile Tube" (Web page). P.T. Geotechnical Systemindo, Jakarta – Selatan, Indonesia. Available at http://ptgsi.com/tube. Accessed on 8.1.2019.

Ringeling, R. H. P. (1998). *Handling of Contaminated Dredged Material*. Delft, The Netherlands: Delft University Press. Available at https://pdfs.semanticscholar.org/b028/adb11fe20b897ab61e9131f19c7dc3c29fea.pdf

Reynolds, T.D., and Richards, P.A. (1996). *Unit Operations and Processes in Environmental Engineering*, 2nd Ed. Boston, Mass.: PWS Publishing.

Shin E.C., and Oh, Y.I. (2007). Coastal erosion prevention by geotextile tube technology. *Geotextile and Geomembranes*, 25, 264-277.

Sullivan, D.E. and Vesilind, P.A. (1986). Centrifuge Trade-Offs, Operation Tips for Sludge Handling, *Operations Forum* 1986, pp. 24-27.

Tayade, B.R., Mahalingaiah, A.V., Gokhale, N.V., and Kudale, M.D. (2015). Importance of location and alignment of geotextile tubes for the coastal protection measures. *Aquatic Procedia*, 4, 190-197.

TenCate Geosynthetics North America (2013). Geotube® Dewatering Technology For Palm Oil Mill Effluent Sludge Dewatering. Available at https://www.tencategeo.us/media/f8e18420-5b16-49a7-91eb-80b448569337/Vo7ayw/TenCate%20Geosynthetics/Documents%20ASIA/%20English/Brochures/Geotube%C2%AE%20Dewatering/Geotube%20Brochure%20For%20Palm%20Oil%20Mill%20Effluent%20Sludge%20Dewatering%20(POME).pdf

Texas Department of Transportation (TexDOT; 2015). Average Low Bid Unit Price – Statewide 3 Month Moving Average: October 2015–December 2015. Available at https://ftp.dot.state.tx.us/pub/txdot-info/cmd/cserve/2015-oct-dec.xls

The Constructor (2019). "Lime Soil Stabilization Method and Factors Affecting it" (Web page). Available at https://theconstructor.org/geotechnical/lime-soil-stabilization-method/27105/ Accessed on 8.1.2019.

U.S. Geological Survey (2011). National Minerals Information Center: Lime Statistics and Information. U.S. Department of the Interior, Washington, D.C. Available at https://minerals.usgs.gov/minerals/pubs/commodity/lime/myb1-2011-lime.pdf

Water Environment Federation (1996), *Operation of Municipal Wastewater Treatment Plants – Manual of Practice, Vol. 11*. 5th ed. Water Environment Federation, Alexandria, Virginia.